City of

FRESNO

DEPARTMENT OF PUBLIC WORKS

STANDARD SPECIFICATIONS

Published February, 2016

City of Fresno Department of Public Works
2600 Fresno Street
www.fresno.gov

Phone (559) 621-8800
Fax: (559) 498-1439

CERTIFICATION

STANDARD SPECIFICATIONS
DEPARTMENT OF PUBLIC WORKS
2016 EDITION

These Standard Specifications were established by the Director of Public Works in August of 1969 and were adopted by the Council of the City of Fresno on the 4th of March, 1970 by Resolution No. 70-36.
These Standard Specification were updated in January, 2016 and made effective this 1st day of February, 2016. Any plans submitted after this date for approval by the Director shall abide by these Specifications.

Scott Mozier, PE
Public Works Director

1-27-16
Date

TABLE OF CONTENTS

SECTION 1 – TERMS, DEFINITIONS, GENERAL PROVISIONS

SECTION		PAGE
1-1	Terms……	1
1-2	Definitions……	1
1-3	General Provisions……	4
1-3.1	Independent Contractor……	4
1-3.2	Maintenance and Inspection of Records……	5
1-3.3	Notices……	6
1-3.4	Binding……	6
1-3.5	Assignment……	6
1-3.6	Compliance with Law……	6
1-3.7	Waiver……	6
1-3.8	Headings……	6
1-3.9	Severability……	7
1-3.10	Interpretation……	7
1-3.11	Cumulative Remedies……	7
1-3.12	No Third Party Beneficiaries……	7
1-3.13	Funding……	7
1-3.14	Governing Law and Venue……	7
1-3.15	Extent of Agreement……	7

SECTION 2 – SCOPE AND CONTROL OF THE WORK

2-1	Award and Execution of Contract……	9
2-2	Assignment of Payment……	9
2-3	Subcontracts……	9
2-4	Contract Bonds……	10
2-5	Plans and Specifications and Intent of the Contract Documents……	11
2-5.1	General……	11
2-5.2	Precedence of Contract Documents……	13
2-5.3	Shop Drawings……	14
2-6	Work to be Done……	15
2-7	Subsurface Data……	15
2-8	Right of Way……	15
2-9	Surveying……	16
2-9.1	Permanent Survey Markers……	16
2-9.2	Lot Stakes……	16
2-9.3	Survey Services……	16
2-9.4	Private Engineers……	16
2-9.5	Line and Grade……	16
2-10	City Supervision and Inspection……	17
2-11	Materials Acceptance Testing……	18
2-11.1	Pre-Project Approval of Testing Firms……	18
2-11.2	Pre-Construction……	19
2-11.3	Execution of Acceptance Testing……	19
2-11.4	Post Construction……	22
2-11.5	Quality Control of Acceptance Testing……	22

TABLE OF CONTENTS

SECTION 3 – CHANGES IN WORK

SECTION		PAGE
3-1	Changes Requested by the Contractor…….	24
3-1.1	Payment for Changes Requested by the Contractor……..	24
3-2	Changes Initiated by the City……..	24
3-2.1	Payment For Changes Initiated by the City……..	24
3-2.1.1	Agreed Prices……	24
3-2.1.2	Unit Prices……..	24
3-2.1.3	Formula for Prices…….	25
3-2.1.4	Limited City Power…….	25
3-2.1.5	Changes in Accordance with Specifications……..	26
3-3	Extra Work……	26
3-3.1	General…….	26
3-4	Change Orders and Disputed Work or Cost……..	26

SECTION 4 – CONTROL OF MATERIALS

4-1	Materials and Workmanship……	28
4-1.1	General……	28
4-1.2	Protection of Work and Materials……	28
4-1.3	Inspection Requirements……..	28
4-1.3.1	Inspection of Materials Not Locally Produced……	29
4-1.3.2	Inspection by the City……	29
4-1.3.3	Inspection by Others…….	29
4-1.4	Test of Materials……	29
4-1.5	Trade Names or Equals……	30
4-1.6	Compaction Tests…….	30

SECTION 5 – UTILITIES

5-1	Location……	32
5-2	Protection…….	32
5-3	Removal……	32
5-4	Relocation…….	33
5-5	Delays……	33
5-6	Cooperation……..	33
5-7	Limitations of Liability…….	33

SECTION 6 – PROSECUTION, PROGRESS AND ACCEPTANCE OF THE WORK

6-1	Construction Schedule and Commencement of Work……..	34
6-2	Prosecution of Work……	34
6-3	Suspension of Work……	35
6-4	Default of Contractor……..	35
6-5	Contractor's Right to Stop Work or Terminate Contract……..	35
6-6	Termination of Contract…….	37
6-7	Delays and Extensions of Time……	39
6-8	Time of Completion……	40

TABLE OF CONTENTS

SECTION		PAGE
6-9	Project Close Out; Completion and Acceptance……	41
6-10	Liquated Damages……	42
6-11	Use of Improvement During Construction……	42

SECTION 7 – RESPONSIBILITIES OF THE CONTRACTOR IN THE CONDUCT OF THE WORK

7-1	Contractor's Equipment and Facilities……	44
7-2	Labor……	44
7-2.1	General……	44
7-2-2	Laws……	44
7-2.2.1	California Labor Code Section 1775 & 1777.5……	44
7-2.2.2	California Labor Code Section 6705……	47
7-2.2.3	Economic Stabilization Act of 1970……..	47
7-2.2.4	Occupational Safety and Health Act of 1970……	47
7-2.2.5	California Labor Code Section 1776……..	47
7-2.2.5.1	Accuracy of Records……..	48
7-2.2.5.2	Payroll Submission……	48
7-2.2.5.3	Certified copies of Records……	49
7-2.2.6	Fair Employment Practices and Nondiscimination……	49
7-3	Insurance Requirements……	53
7-4	Indemnification……	58
7-5	Permits and Fees……..	58
7-6	The Contractor's Representative……	59
7-7	Cooperation and Collateral Work……	59
7-8	Project Site Maintenance……..	60
7-8.1	Clean Up and Dust Control……..	60
7-8.2	Air Pollution Control……..	61
7-8.3	Vermin Control……..	61
7-8.1	Sanitation……	62
7-8.5	Temporary Light, Power and Water……	62
7-8.6	Water Pollution Control……	62
7-8.7	Drainage Control……	62
7-9	Protection and Restoration of Existing Improvements……	62
7-10	Public Convenience and Safety……..	63
7-10.1	Traffic and Access……	63
7-10.2	Americans with Disabilities Act Accessibility……	64
7-10.3	Storage of Equipment and Materials in Public Streets……	66
7-10.4	Street Closures, Detours, Barricades……..	66
7-10.5	Traffic Control Plan……	68
7-10.6	Public Safety……	69
7-10.6.1	Safety Orders……..	69
7-10.6.2	Use of Explosives……..	69
7-10.6.3	Special Hazardous Substances and Products……	69
7-10.6.4	Confined Spaces……	69
7-11	Hazardous Conditions: Contractor's Responsibility for Precautions……..	70
7-12	Patent Fees or Royalties……	70
7-13	Advertising……	70
7-14	Risk of Loss……..	71
7-15	Contractor's Responsibility for Site Conditions……..	71

TABLE OF CONTENTS

SECTION		PAGE
7-16	Warranty……	71

SECTION 8 – MEASUREMENT AND PAYMENT

8-1	Measurement of Quantities for Unit Price Work……	73
8-1.1	Methods of Measurement……..	73
8-1.2	Certified Weights…….	73
8-1.3	Units of Measurements……..	73
8-2	Payment……	73
8-2.1	Monthly Payment Date, Quantity and Estimate of Value……	73
8-2.2	Retainage……..	73
8-2.3	Judge of Performance under the Contract Documents……	74
8-2.4	Final Payment……..	75

SECTION 9 –RESERVED

SECTION 10 – CLEARING AND GRUBBING

10-1	General……	79
10-2	Preservation of Property……..	79
10-3	Clearing and Grubbing Operations……	79
10-4	Removal and Disposal of Materials…….	80
10-5	Payment……	80

SECTION 11 – EXCAVATION & GRADING

11-1	General……..	81
11-2	Earthwork……..	81
11-3	Roadway Excavation……..	81
11-4	Dust Control (See Section 7-8.1)…….	82
11-5	Miscellaneous Highway Facilities…….	82
11-6	Payment……	82

SECTION 12 – AGGREGATE SUBBASE AND AGGREGATE BASE

12-1	General……	83
12-2	Aggregate Subbase……..	83
12-3	Aggregate Base…….	83
12-4	Compaction……	83
12-5	Use of Recycled Materials……	83
12-6	Testing of Materials……	83
12-7	Measurement of Material and Payment……	83

SECTION 13 – ASPHALT CONCRETE PAYMENT

13-1	General……	85
13-2	Aggregate Material……	85
13-3	Asphalt Concrete……..	85

TABLE OF CONTENTS

SECTION		PAGE
13-4	Paint Binder……	85
13-5	Slurry Seal……..	86
13-6	Rolling Equipment…….	86
13-7	Finishing Roadway……	86
13-8	Mix Design…….	86
13-9	Payment…….	87

SECTION 14 – CURB, GUTTER, SIDEWALK, DRIVEWAY, ALLEY APPROACHES AND VALLEY GUTTERS

14-1	General…….	88
14-2	Portland Cement Concrete……	88
14-3	Ready-Mixed Concrete……..	88
14-4	Construction…….	88
14-5	Driveways…….	90
14-6	Finish…….	90
14-7	Curing……	90
14-8	Backfilling…….	90
14-9	Protecting Concrete……	90
14-10	Rock Pockets……..	90
14-11	Cleaning Up…….	90
14-12	Payment……	90

SECTION 15 – TRAFFIC DIVIDER ISLANDS

15-1	General……..	92
15-2	Construction……	92
15-3	Payment……	92

SECTION 16 – TRENCHING AND TRENCH RESURFACING

16-1	General……..	93
16-2	Materials……..	93
16-3	Trenching…….	93
16-4	Trench Resurfacing……	95
16-5	Trench Compaction…….	95
16-6	Pave Back Requirements for City Streets……..	95
16-7	Payment……	95

SECTION 17 – SANITARY SEWER PIPE AND APPURTENANCES

17-1	General…….	97
17-2	Materials……..	97
17-2.1	Vitrified Clay Pipe (VCP)……	97
17-2.1.1	General…….	97
17-2.1.2	Manufacturing Requirements……	97
17-2.1.3	Installation…….	97
17-2.1.4	Testing……	97
17-2.2	Polyvinyl Chloride (PVC) Pipe……	97

TABLE OF CONTENTS

SECTION		PAGE
17-2.2.1	General……..	97
17-2.2.2	Manufacturing Requirements…….	98
17-2.2.3	Jointing Systems…….……	98
17-2.2.4	Test Requirements…….……	100
17-2.3	PVC – Lined Reinforced Concrete Pipe……..	101
17-2.3.1	General…….	101
17-2.3.2	Manufacturing Requirements……	101
17-2.4	Ductile Iron Pipe……..	101
17-2.5	Prohibited Pipe Material…….	101
17-3	Trench and Structure Excavation and Backfill……	102
17-3.1	General…….	102
17-3.2	Trench and Structure Excavation…….	102
17-3.2.1	Trench Widths…….	103
17-3.2.2	Trench Grade……..	104
17-3.2.3	Fine Grading……	104
17-3.2.4	Over Excavation…….	104
17-3.2.5	Excavation for Manholes, Valves, Inlets, Catch Basins & Other Accessories…...	104
17-3.2.6	Pavement and Concrete Cutting and Removal…….	105
17-3.2.7	Grading and Stockpiling……	105
17.3.2.8	Open Trench……	105
17-4	Installation of Pipe……..	106
17-5	Foundation, Bedding, Backfilling and Compaction of Trenches……..	107
17-5.1	Foundation and Bedding…….	107
17-5.2	Pipe Embedment Zone……	108
17-5.3	Initial Backfill……..	108
17-5.4	Final Backfill……	109
17-6	Connection of Service Laterals (House Branches)……...	109
17-7	Installation of Sewer House Branches……	110
17-8	Manhole Construction and Drop Sewer Connections…….	111
17-8.1	General……	111
17-8.2	Design and Spacing……..	111
17-8.3	Materials…….	112
17-8.4	Installation……..	112
17-8.5	Abandon and Removal…….	113
17-8.6	Adjustments…….	113
17-8.7	Drop Sewer Connections…….	114
17-8.8	Payment……...	114
17-9	Future Stub Outs…….	114
17-10	Deflection Test of PVC Sewer Lines……	114
17-11	Leakage Test of Sewer Lines and Service Laterals…….	114
17-12	Television Inspection of Interior of Installed Pipe…….	117
17-12	Television Inspection of Interior of Installed Pipe (Additional Information)……	118
17-13	Measurement…….	119
17-14	Payment……..	119

SECTION 18 – GUIDELINES FOR PROPOSED BIKE LANE PROJECTS WITHIN EXISTING STREETS

18-1	General……	121

TABLE OF CONTENTS

SECTION 19 – JACKING PIPE

SECTION		PAGE
19-1	General……..	123
19-2	Materials……	123
19-3	Excavation of Jacking and Receiving Pits……	123
19-4	Boring and Jacking……..	124
19-5	Grade Tolerance……..	125
19-6	Backfill, Compaction and Restoration of Surfaces for Jacking and Receiving Pits	125
19-7	Payment…….	125

SECTION 20 – STORM DRAINAGE PIPING AND STRUCTURES

20-1	General……..	126
20-2	Use of Plastic Pipe……...	126

SECTION 21 – DOMESTIC WATER FACILITIES DESIGN CRITERIA

PART I – INTRODUCTION		
21-1	Definitions……..	127
21-2	Other Requirements…….	128
PART II – GENERAL PROVISIONS		
21-3	Other Requirements…….	128
21-3.1	Scope…….	128
21-3.2	Standard Criteria……..	129
21-4	Enforcement……..	129
PART III – DESIGN CRITERIA		
21-5	Water Main Pressures, Capacities, and Sizes……	129
21-5.1	Quantity of Domestic Flow…….	129
21-5.2	Quantity of Fire Flow……	129
21-5.3	Pressure……	129
21-5.4	Velocity……..	130
21-5.5	Head Loss…….	130
21-5.6	Hazen-Williams “C”…….	130
21-5.7	Minimum Water Main Size……	130
21-6	Location of Air Release Valve Assemblies…….	130
21-7	Location of Blow Off Assemblies…….	130
21-8	Fire Hydrant Assemblies……..	130
21-9	Water Main Locations……	130
21-9.1	Water Main Location in Roads or Streets……..	130
21-9.2	Curved Water Main Requirements…….	131
21-9.3	Joint Deflection for Curved Water Main…….	131
21-9.4	Elbows…….	131
21-9.5	Water-Sewer Separation……..	131
21-10	Criteria for the Separation……	131
21-10.1	Basic Separation Standards……	131
21-10.2	Exceptions to Basic Separation Standards……..	131
21-10.3	Special Provisions…….	132
21-11	Alternate Criteria for Construction……..	132
21-12	Procedure for Water and Sewer System Installations in Subdivisions……..	137

TABLE OF CONTENTS

SECTION		PAGE
21-13	Easements	137
21-13.1	Easements	137
21-13.2	Water Main Location in Easement	138
21-13.3	Where Easements Follow Common Lot Lines	138
21-13.4	Deeds of Easements	138
21-13.5	Dedications	138
21-14	Depth of Water Mains	138
21-14.1	Basic Requirements	138
21-14.2	Standard Depths	138
21-14.3	Exceptions	139
21-15	Structural Requirements	139
21-15.1	Buried Facilities	139
21-15.2	Other Pipes and Structures	139
21-15.3	Flexible Joints	139
21-15.4	Thrust Blocks	139
21-15.5	Mechanical Restrained Joints	139
21-16	Design Criteria for Water Meters	140
PART IV – MATERIALS		
21-17	Requirements	140
21-18	Pipe Materials	140
21-18.1	Ductile Iron Pipe and Ductile Iron Fittings	140
21-18.1.1	Confined Easements	141
21-18.1.2	Polyvinyl Chloride (PVC) Pressure Pipe	141
21-19	Valves	143
21-19.1	Butterfly Valves	143
21-19.2	Gate Valves	145
21-20	Appurtenances	146
21-20.1	Blow-Off Assemblies for Water Mains	146
21-20.2	Air Release Valve Assemblies	146
21-20.3	Water Service Assemblies (2 inches and smaller)	146
21-20.4	Valve Service Casing and Lid	148

SECTION 22 – WATER FACILITIES

22-1	Scope	149
22-2	General	149
22-2.1	Quality Control of Materials	149
22-2.2	Quality of Workmanship	149
22-2.3	Connections of Existing Facilities	149
22-2.4	Defective Work	149
22-2.5	Construction Staking and “Record-Drawings”	150
22-3	Polyvinyl Chloride (PVC) Pressure Pipe and Fittings Installation	150
22-3.1	Scope of Work	150
22-3.2	Installation	150
22-3.3	Tracer Wire	150
22-4	Ductile Iron Pressure Pipe and Fittings Installation	150
22-4.1	Scope of Work	150
22-4.2	Installation	150
22-5	Valve Casting and Lid Installation	151

TABLE OF CONTENTS

SECTION		PAGE
22-6	Earthwork for Ductile Iron and PVC Pipe Installation……	151
22-6.2	Trench Bottom……..	151
22-6.3	Bell Holes……..	151
22-6.4	Trench Width……	151
22-6.5	Rock or Hard Pan Excavation…….	152
22-6.6	Barricades and Safety……..	152
22.6.7	Shoring……	152
22-7	Using Earth Mounds…….	152
22-8	Backfilling and Tamping……	152
22-9	Testing and Sterilization……	153
22-9.1	General……	153
22-9.2	Field Testing……	153
22-9.3	Sterilization……..	154

SECTION 23 – TRAFFIC SIGNALS AND STREET LIGHTING

23-1	Technical Specifications for Traffic Signals……	156
23-1.1	General……..	156
23-1.2	Materials…….	156
23-1.3	Equipment List……..	157
23-1.4	Warranties, Guarantees and Instruction Sheets…….	157
23-1.5	Maintaining Existing and Temporary Electrical Systems……..	157
23-1.6	Scheduling of Work…….	158
23-1.7	Foundations……..	158
23-1.8	Standards, Steel Pedestal and Posts……...	159
23-1.9	Conduit……..	159
23-1.10	Pull Boxes…….	160
23-1.11	Conductors and Wiring……	161
23-1.12	Fused Splice Connectors……	163
23-1.13	Bonding and Grounding……	163
23-1.14	Testing……..	163
23-1.15	Painting……	164
23.1.16	Service……..	164
23-1.17	Signal Faces and Signal Heads……	164
23-1.18	Pedestrian Signals……..	165
23-1.19	Detection……..	166
23-1.20	Pedestrian Push Buttons……..	167
23-1.21	Audible Pedestrian Signal Specification…….	167
23-1.22	Emergency Vehicle Priority Control System……..	167
23-1.23	Luminaires……	169
23-1.24	Barrier Posts……	169
23-1.25	Signal Turn-On Requirements……..	169
23-1.26	Traffic Control……..	169
23-1.27	Payment……	169
23-2	Traffic Controllers, Cabinets and Ancillary Devices……..	171
23-2.1	General…….	171
23-3	City Specifications for Street Lighting……..	177
23-3.1	General……..	177
23-3.2	Materials…….	177

TABLE OF CONTENTS

SECTION		PAGE
23-3.3	Equipment List……..	177
23-3.4	Warranties, Guarantees and Instruction Sheets……	178
23-3.5	Maintaining Existing and Temporary Electrical Systems……	178
23-3.6	Scheduling of Work……..	178
23-3.7	Foundations……	179
23-3.8	Poles……	180
23-3.9	Conduit……	180
23-3.10	Pull Boxes……	180
23-3.11	Conductors and Wiring……	180
23-3.12	Fused Splice Connectors……	183
23-3.13	Bonding and Grounding……	183
23-3.14	Painting……	183
23-3.15	Service……	183
23-3.16	Luminaires……..	184
23-4	Ornamental Street Lighting (Section 30 incorporated into Section 23)……	197
23-4.1	Intent……	197
23-4.2	General……	197
23-4.3	Specifications……	197
23-4.4	Streetlight Plan……	197
23-4.5	Materials……..	198
23-4.6	Equipment List……	198
23-4.7	Warranties, Guarantees and Instruction Sheets……	198
23-4.8	Foundations……	199
23-4.9	Poles……	199
23-4.17	Luminaire……	200
23-4.18	Photoelectric Control……	200
23-4.19	Ornamentation……	200

SECTION 24 – DEMOLITIAN OF BUILDINGS

24-1	General……..	207
24-2	Public Safety……	207
24-3	Utilities……	207
24-4	Permits……...	207
24-5	Disposition of Debris……	207
24-6	Basements……	207
24-7	Measurement and Payment……	207

SECTION 25 – LANDSCAPE IRRIGATION SYSTEMS

25-1	Part 1 General Conditions……	208
25-1.1	General……	208
25-1.2	Design……	209
25-1.3	Tests and Inspections……..	209
25-1.4	Submittals……..	209
25-1.5	Project Record Documents……	210
25-2	Part 2 General Conditions……	211
25-2.1	General……	211
25-2.2	Materials……	211

TABLE OF CONTENTS

SECTION		PAGE
25-3	Part 3 Execution……	218
25-3.1	Trenching……	218
25-3.2	Installation……	219
25-3.3	Backfill and Compaction……	226
25-4	Part 4 Inspection and Tests……..	226
25-4.1	Periodic Inspections……..	226
25-4.2	Testing and Adjustment……	227
25-5	Part 5 Maintenance and Close Out……	228
25-5.1	Maintenance……	228
25-5.2	Completion……..	228
25-5.3	System Guarantee……	228
25-5.4	Measurement……..	229

SECTION 26 – PLANTING SPECIFICATIONS

26-1	Part 1 General……..	230
26-1.1	Scope of Work……..	230
26-1.2	Testing and Inspection……	230
26-2	Part 2 Materials/Execution……...	231
26-2.1	Plant Material……..	231
26-2.2	Grading and Soil Preparation……	232
26-2.3	Weed Control……	235
26-2.4	Planting……..	235
26-2.5	Turf……	236
26-2.6	Turf Fertilizer……	237
26-2.7	Planting Turf Seed……	237
26-2.8	Planting Sod……..	238
26-2.9	Watering……	238
26-2.10	Turf Grass Establishment Period……	238
26-2.11	Trees……...	239
26-2.12	Draining Holes and Backfilling for Trees……	240
26-2.13	Requirements for Drilling……	240
26-2.14	Tree Pits……	241
26-2.15	Tree Fertilizer……	241
26-2.16	Tree Staking……	241
26-2.17	Mulching……	242
26-2.18	Establishment Period……..	242
26-2.19	Shrubs……	242
26-2.20	Mulching……	243
26-2.21	Ground Cover……..	243
26-2.22	Tree Transplanting……..	243
26-3	Part 3 Close Out……..	246
26-3.1	Clean Up……	246
26-3.2	Maintenance Period……	246
26-3.3	Closeout/Guarantee……	247

TABLE OF CONTENTS

SECTION 27 – CONSTRUCTION PLAN SUBMITTALS

SECTION		PAGE
27-1	Water and Sewer Plan Submittal Standards……..	249
27-1.1	The following shall be submitted with the plan:…….	249
27-1.2	Original drawings shall be…….	249
27-1.3	The cover drawing shall show the following……	249
27-1.4	Each drawing shall show the following……	250
27-1.5	The plan view shall show the following……	250
27-1.6	The profile view shall show the following……	251
27-1.7	All elevations shall be on USGS……..	251
27-1.8	Underground Utilities which may conflict……	251
27-1.9	Sanitary Sewer System…….	251
27-1.10	Water System……	251
27-1.11	Sanitary Sewers located within 50 ft of a water supply shall be constructed of Material to prevent contamination of the well…….	251
27-1.12	The Developer's engineer shall submit seventeen (17) sets of plan to the City after the plans are signed by the City……..	251
27-1.13	The Developer's engineer may submit a plan view layout of the water or sanitary Sewer system for design suggestions prior to drawing final plans……..	251
27-2	Street Plan Submittal Standards……..	251
27-2.1	The following shall be submitted with the plans:……..	252
27-2.2	Original drawing shall be……	252
27-2.3	The cover drawing shall show the following……	252
27-2.4	Each drawing shall show the following……	252
27-2.5	The plan view shall show the following……	253

SECTION 28 – TRAFFIC STRIPES AND PAVEMENT MARKINGS

28-1	General…….	254
28-2	Materials……	254
28-3	Removal of Existing Markings……	254
28-4	Placement of Thermoplastic Traffic or Solvent-Borne Paint Stripes and Pavement Markings……	255
28-5	Placement of Raised Pavement Markers……..	256
28-6	Measurement……	256
28-7	Payment…….	256

SECTION 29 – CONCRETE MASONRY WALL

29-1	General…….	257
29-2	Materials……	257
29-2.1	Concrete Masonry Units…….	257
29-2.2	Cement……..	257
29-2.3	Mortar……	257
29-2.4	Grout…….	257
29-2.5	Lime……..	258
29-2.6	Aggregate…….	258
29-2.7	Concrete……	258

TABLE OF CONTENTS

SECTION		PAGE
29-2.8	Reinforcing Steel	258
29-3	Clearing and Grubbing	258
29-4	Excavation and Preparation of Subgrade	258
29-5	Construction	258
29-5.1	Measurement	259
29-6	Payment	259

SECTION 31 – TECHNICAL SPECIFICATIONS FOR INTELLIGENT TRANSPORTATION SYSTEMS

31-1	Definitions	261
31-2	General	261
31-3	Materials	261
31-4	Equipment List	262
31-5	Warranties, Guarantees, and Instruction Sheets	262
31-6	Maintaining Existing and Temporary Electrical Systems	262
31-7	Scheduling of Work	263
31-8	Traffic Control	263
31-9	36’ X 60” ITS Vault(s)	263
31-10	48” X 84” ITS Vault(s)	264
31-11	ITS Conduits/Fiber Ducts	266
31-12	Horizontal Directional Drilling	272
31-13	Qualified Products List (QPL)	277

SECTION 32 – WELL DESTRUCTIONS STANDARDS AND PROCEDURES

32-1	General	279
32-2	Statement of Authority	279
32-2.1	Local	279
32-2.2	State	279
32-2.3	Authorized Contractor	279
32-2.4	Inspection	280
32-3	Pre-Destruction Preparation	280
32-3.1	Equipment and Debris Removal	280
32-3.2	Sediment Removal	280
32-3.3	Casing Destruction	280
32-3.4	Video Record	281
32-3.4.1	Submission Requirements	281
32-3.4.2	Clarity Requirements	281
32-3.5	Special Removal and Casing Destruction Inspection	281
32-4	Destruction Application Requirements	281
32-4.1	Application Documentation	281
32-4.2	Permit Application	282
32-4.3	Volume Calculation	282
32-4.3.1	Well and Filter Volume	282
32-4.4	Underground Service Alert (USA)	282
32-5	Destruction Operations	282
32-5.1	Excavation Requirement	282
32-5.1.1	Well Accessibility	283
32-5.1.1.1	Open Access	283

TABLE OF CONTENTS

SECTION **PAGE**

32-5.1.1.2 Restrictive Access…… 283
32-5.1.2 Alternative Methods…….. 283
32-5.2 Placement of Sealing Material……. 283
32-5.2.1 Tremie Pipe…… 283
32-5.2.2 Failed Sealing Operation……. 283
32-5.3 Sealing Materials…….. 284
32-5.3.1 Submittals…… 284
32-5.3.2 Sealing Material Design Mixtures…… 284
32-5.3.2.1 Sand Cement……. 284
32-5.3.2.2 Neat Cement……. 284
32-5.3.2.3 Cement Bentonite…….. 284
32-5.4 Pressure Application to Sealing Material…… 284
32-5.4.1 Opened Bottom Well…….. 284
32-5.4.2 Screened Well……. 284
32-5.4.3 Pressurization of Well…… 285
32-5.5 Inspection Scheduling…….. 285
32-6 Technical Problems…….. 285
32-7 Finalizing Permit…… 285
32-8 Standard Revisions and Modifications…….. 285

SECTION 33 – RECYCLED WATER FACILITIES DESIGN CRITERIA

Part I – Introduction……. 286
33-1 Definitions…….. 286
33-2 Other Requirements…… 287
Part II – General Provisions…….. 288
33-3 Other Requirements……. 288
33-3.1 Scope…… 288
33-3.2 Standard Criteria……. 288
33-4 Enforcements…….. 289
Part III – Design Criteria..... 289
33-5 Recycled Water Main Pressures, Capacities, and Sizes……. 289
33-5.1 Quantity of Recycled Water Flow……. 289
33-5.2 Pressure…… 289
33-5.3 Velocity……. 289
33-5.4 Head Loss…… 289
33-5.5 Hazen-Williams “C”……. 289
33-5.6 Minumum Recycled Water Main Size…….. 289
33-6 Location of Air Release Valve Assemblies…….. 290
33-7 Location of Blow-Off Assemblies…….. 290
33-8 Recycled Water Main Locations…… 290
33-8.1 Recycled Water Main Location in Roads or Streets……... 290
33-8.2 Curved Recycled Water Main Requirements…….. 290
33-8.3 Joint Deflection for Curved Recycled Water Main…….. 290
33-8.5 Recycled Water-Water-Sewer Separation…….. 290
33-9 Criteria for the Separation…….. 291
33-9.1 Basic Separation Standards…….. 291
33-9.2 Basic Separation Standards…….. 291
33-9.3 Special Provisions……. 292

TABLE OF CONTENTS

SECTION		PAGE
33-10	Alternate Criteria for Construction……	292
33-11	Procedure for Water, Recycled Water and Sewer System Installations In Subdivisions……	292
33-12	Easements……..	293
33-12.1	Easements……	293
33-12.2	Recycled Water Main Location in Easement……	294
33-12.3	Where Easements Follow Common Lot Lines……	294
33-12.4	Deeds for Easements……	294
33-12.5	Dedications……	294
33-13	Depth of Recycled Water Mains……	294
33-13.1	Basic Requirements……	294
33-13.2	Standard Depths……..	295
33-13.3	Exceptions……	295
33-14	Structural Requirements……	295
33-14.1	Buried Facilities……	295
33-14.2	Other Pipes and Structures……	295
33-14.3	Flexible Joints……	295
33-14.4	Thrust Blocks……	296
33-14.5	Mechanical Restrained Joints……..	296
33-15	Design Criteria for Recycled Water Meters……	296
PART IV – Materials……		296
33-16	Requirements……	296
33-17	Pipe Materials……..	297
33-17.1	Ductile Iron Pipe and Ductile Iron Fittings……..	297
33-17.1.1	Confined Easements……	298
33-17.2	Polyvinyl Chloride (PVC) Pressure Pipe……	299
33-18	Valves……	301
33-18.1	Butterfly Valves……	301
33-18.2	Gate Valves……	302
33-19	Appurtenances……...	303
33-19.1	Blow-Off Assemblies for Recycled Water Mains……...	304
33-19.2	Air Release Valve Assemblies……..	304
33-19.3	Recycled Water Service Assemblies (2 inches and smaller)……..	305
33-19.4	Valve Service Casing and Lid……..	307

SECTION 34 – RECYCLED WATER FACILITIES

34-1	Scope……..	308
34-2	General……	308
34-2.1	Quality Control of Materials……	308
34-2.2	Quality of Workmanship……..	308
34-2.3	Connections to Existing Facilities……..	308
34-2.4	Defective Work……	308
34-2.5	Construction Staking and (Record-Drawings)……	309
34-3	Polyvinyl Chloride (PVC) Pressure Pipe and Fittings Installation……	309
34-3.1	Scope of Work……..	309
34-3.2	Installation……	309
34-3.3	Tracer Wire with Marking Tape……	309

TABLE OF CONTENTS

SECTION		PAGE
34-4	Ductile Iron Pressure Pipe and Fittings Installation…….	310
34-4.1	Scope of Work……..	310
34-4.2	Installation…….	310
34-5	Valve Casing and Lid Installation……..	310
34-6	Earthwork for Ductile Iron and PVC Pipe Installation…….	310
34-6.2	Trench Bottom……..	311
34-6.3	Bell Holes……..	311
34-6.4	Trench Width…….	311
34-6.5	Rock or Hardpan Excavation……	311
34-6.6	Barricades and Safety…….	311
34-6.7	Shoring……..	312
34-7	Backfilling and Tamping……..	312
34-8	Testing and Sterilization……..	313
34-8.1	General……..	313
34-8.2	Field Testing…….	313
34-8.3	Sterilization……	314
34-9	Signage……...	315
34-10	Abandonment…….	315
34-10.1	General……..	315
34-10.2	Recycled Water Lines……..	315

SECTION 35 – NON-CITY OF FRESNO PUBLIC RIGHT OF WAY

35-1	General…….	315
35-2	Sewer Crossings…….	315
35-3	Recycled Water Crossings…….	316

SECTION 1 – TERMS, DEFINITIONS, GENERAL PROVISIONS

1-1 TERMS

Unless otherwise stated, the words directed, required, permitted, ordered, instructed, designated, considered necessary, prescribed, approved, acceptable, satisfactory, or words of like import, refer to actions, expressions, and prerogatives of the Engineer.

1-2 DEFINITIONS

Unless the particular provision or context otherwise requires, the definitions and provisions contained in this section shall govern the construction, meaning and application of words and phrases used in these City Standard Specifications. The definition of each word or phrase shall constitute, to the extent applicable, the definition of each word or phrase which is derivative from it, or from which it-is a derivative, as the case may be.

AASHTO	American Association of State Highway and Transportation Officials.
ANSI	American National Standards Institute.
ANSI/IES	ANSI/Illuminating Engineering Society.
API	Application Programming Interface.
ASTM	American Society for Testing and Materials specifications.
AWWA	American Water Works Association and its standard specifications.
Bidding Requirements	The Notice Inviting Bids, Instructions to Bidders, form of bid proposal and bidder's bond.
CALTRANS	The State Department of Transportation.
CALTRANS METS	The State Department of Transportation Materials Engineering and Testing Services.
City	City of Fresno, California.
City CM	The City Construction Manager or his/her representative.
City CM Engineer	The City Construction Management Engineer or his/her representative.
City Standard Drawings	City of Fresno, Standard Drawings, Department of Public Works, latest edition as amended from time-to-time. Details of standard structures, devices, or instructions referred to on the Plans or in Specifications by title or number.
City Standard Specifications	City of Fresno, Standard Specifications, Department of Public Works, latest edition as amended from time-to-time.

Contract Documents	The written agreement covering performance of the Work including, but not limited to, the formal contract, Notice Inviting Bids, Instructions to Bidders, affidavit, Proposal, Specifications, bonds and Plans.
Contract Price	The total amount of money for which the contract is awarded.
Contract Unit Price	The Contractor's original bid for a single unit of an item of Work in the Proposal.
Contractor	The individual, partnership, corporation, joint venture, or other legal entity entering into a contract with the City to perform the Work. In the case of the Work being done under permit issued by the City, the Permittee shall be construed to be the Contractor.
Council	The Council of the City of Fresno.
County	The County of Fresno.
CTM	California Test Methods of CALTRANS.
Days	Days shall mean consecutive calendar days unless otherwise specified.
Developer	A private Person proposing to subdivide or improve land within the City and constructing improvements to be accepted by the City.
DWR	The State of California Department of Water Resources.
Notice	Any notice allowed or required to be given by the City and signed by the Engineer.
Owner Superintendent	City Electrical The TSSL Supervisor or his/her representative.
Engineer	The City Engineer or other registered professional civil engineer of the City, acting either directly or through authorized agents.
FMFCD	Fresno Metropolitan Flood Control District
IEEE Standards	The standards of the Institute of Electrical and Electronics Engineers.
NFPA	National Fire Protection Association.
NEMA	National Electrical Manufacturers Association.
Person	Any individual, association, partnership, corporation, trust, joint venture, or other legal entity.

Plans	The plans, profiles, cross sections, working drawings, detail drawings and supplemental drawings or exact reproductions thereof, approved by the Engineer, which show the locations, character, dimensions or details of the Work.
Proposal	The offer of a bidder when submitted on the bid proposal form contained in the Bidding Requirements, properly signed and guaranteed.
Reference Specifications	Those bulletins, standards, rules, methods of analysis or test, codes, and specifications of other agencies, engineering societies, or industrial associations referred to in the Contract Documents. These refer to the latest edition, including amendments in effect and published at the time of advertising the project or issuing the permit, unless specifically referred to by edition, volume, or date.
Roadway	The portion of a Street reserved for vehicular use.
Service Connection	Service Connections are all or any portion of the conduit, cable or duct, including meter, between a Utility distribution line and an individual consumer.
Sewer	Any conduit intended for the reception and transfer of sewage and fluid industrial waste.
Sewer House Branch	A Sewer, within a public Street or right of way, proposed to connect any parcel, lot, or part of a lot with a main line Sewer.
Site	The location where the Work is to be performed as shown in the Contract Documents.
Special Conditions	Any conditions which supplement or modify these City Standard Specifications including Plans.
Specifications	City Standard Specifications, Reference Specifications, Special Conditions and specifications in supplemental agreements between the Contractor and the City.
State	The State of California.
State Standard Drawings	The State Department of Transportation Standard Drawings, latest edition unless otherwise noted. Details of standard structures, devices, or instructions referred to in the Plans or in Specifications by State title or number.
State Standard Specifications	CALTRANS Standard Specifications, 2010 edition unless otherwise noted.
Storm Drain	Any conduit and appurtenances intended for the reception and transfer of storm water.

Street	Any public road, highway, parkway, freeway, alley, sidewalk or right of way.
Subcontractor	The Person entering into a contract with the Contractor to perform a portion of the Work.
Supervision	Supervision, where used to indicate supervision by the Engineer, shall mean the performance of obligations and the exercise of rights specifically imposed upon and granted to the City in becoming a party to the contract. Except as specifically stated in the contract, supervision by the City shall not mean active and direct superintendence of details of the Work. The City shall have no responsibility for any Contractor's or Subcontractor's means, methods, techniques, equipment choice and usage, sequence, schedule, safety programs, or safety practices. The City does not assume responsibility for any Contractor's or Subcontractor's failure to perform its work in accordance with the Contract Documents.
Surety	Any individual, firm or corporation, bound with and for the Contractor for the acceptable performance, execution, and completion of the Work, and for the satisfaction of all obligations incurred.
Traffic Engineer	The City Traffic Engineer or his/her representative.
TSSL Supervisor	The City Traffic Signal and Streetlight Supervisor.
Utility	Tracks, overhead or underground wires, pipe lines, conduits, ducts, or structures, Sewers or Storm Drains owned, operated, or maintained in or across a public right of way or private easement.
Water Division	The Division of the City of Fresno Department of Public Utilities established by the City to administer the City Water Systems.
Work	That which is proposed to be constructed or done under the contract or permit, including the furnishing of all labor and materials.

1-3 GENERAL PROVISIONS

1-3.1 Independent Contractor

In the furnishing of the Work provided for herein, the Contractor is acting as an independent contractor. Neither the Contractor, nor any of its officers, associates, agents or employees shall be deemed an employee, joint venturer, partner or agent of the City for any purpose. However, the City shall retain the right to verify that the Contractor is performing its respective obligations in accordance with the terms of the contract.

Because of its status as an independent contractor, Contractor and its officers, agents and employees shall have absolutely no right to employment rights and benefits available to City employees. Contractor shall be solely liable and responsible for all payroll and tax withholding and for providing to, or on behalf of, its employees all employee benefits including, without limitation, health, welfare and retirement benefits.

In addition, together with its other obligations under the contract, Contractor shall be solely responsible**,** indemnify, defend and save City harmless from all matters relating to employment and tax withholding for and payment of Contractor's employees, including, without limitation, (i) compliance with Social Security and unemployment insurance withholding, payment of workers compensation benefits, and all other laws and regulations governing matters of employee withholding, taxes and payment; and (ii) any claim of right or interest in City employment benefits, entitlements, programs and/or funds offered employees of City whether arising by reason of any common law, de facto, leased, or co- employee rights or other theory**.** It is acknowledged that during the term of the contract, Contractor may be providing services to others unrelated to City or to the contract.

1-3.2 Maintenance and Inspection of Records

Contractor and its Subcontractors are required to maintain books, records, and other documents pertinent to the Work of the contract in accordance with Generally Accepted Accounting Principles. All such books, records, and other documents pertaining to the contract shall be available to City or its authorized representatives upon request during regular business hours throughout the life of the contract and for a period of 5 years after final payment or, if longer, for any period required by law or any State or federal funding agreement applicable to the contract. In addition, all books, documents, papers and records of Contractor and its Subcontractors pertaining to the contract shall be available for the purpose of making audits, examinations, excerpts, and transcriptions for the same period of time by City or its authorized representatives, (and, in the event State or federal funding is applicable to the contract, then also the respective State and federal authorized representatives), and shall allow interviews during normal business hours of any employees who might reasonably have information related to such records. If any litigation, claim, negotiations, audit or other action is commenced before the expiration of said time period, all records must be retained until such action is resolved, or until the end of said time period whichever shall later occur. Failure or refusal by Contractor or its Subcontractors to comply with this provision shall be considered a substantial failure to comply with the contract, and City may declare Contractor in default as set forth in the Contract Documents, withhold payment to Contractor, or take any other action it deems necessary to protect its interests. This provision shall survive expiration or termination of the contract.

Contractor and its Subcontractors shall establish and maintain an accounting system and records that properly accumulate and segregate incurred project costs by line item for the project. The accounting system shall enable the determination of incurred costs at interim points of completion, and provide support for reimbursement payment vouchers or invoices sent to or paid by the City.

Contractor and its Subcontractors shall make the contract and any State or federal funding agreement materials applicable to the contract available at their respective offices at all reasonable times during the entire project period and 5 years from the date of final payment to Contractor. This provision shall survive expiration or termination of the contract.

1-3.3 Notices

Any notice required or intended to be given to either Contractor or City under the terms of the contract shall be in writing and shall be deemed to be duly given if delivered personally or sent by United States registered or certified mail, with postage prepaid, return receipt requested, addressed to the party to which notice is to be given at the party's address set forth on the signature page of the Proposal in the case of the Contractor and at the address set forth on the signature page of the contract in the case of the City, or at such other address as the respective party may from time to time designate by written notice. Notices served by United States mail in the manner above described shall be deemed sufficiently served or given at the time of the mailing thereof.

1-3.4 Binding

Subject to the following section, once the contract is signed by City and Contractor, it shall be binding upon, and shall inure to the benefit of City and Contractor and each of their respective heirs, successors, assigns, transferees, agents, servants, employees and representatives.

1-3.5 Assignment

The contract is personal to the Contractor and there shall be no assignment, transfer, sale, or subcontracting by the Contractor of its rights or obligations under the contract without the prior written approval of the City. Any attempted assignment, transfer, sale or subcontracting by the Contractor, its successors or assigns, shall be null and void unless approved in writing by the City.

1-3.6 Compliance with Law

In providing the Work required under the contract, Contractor and its Subcontractors shall at all times comply with all applicable laws of the United States, the State of California and City, and with all applicable regulations promulgated by federal, state, regional, or local administrative and regulatory agencies, now in force and as they may be enacted, issued, or amended during the term of the contract.

1-3.7 Waiver

The waiver by either Contractor or City of a breach by the other of any provision of the Contract Documents shall not constitute a continuing waiver or a waiver of any subsequent breach of either the same or a different provision of the Contract Documents. No provisions of the contract may be waived unless in writing and signed by all parties to the contract. Waiver of any one provision herein shall not be deemed to be a waiver of any other provision herein.

1-3.8 Headings

Unless otherwise provided, the section headings in the contract are for convenience and reference only and shall not be construed or held in any way to explain, modify or add to the interpretation or meaning of the provisions of the contract.

1-3.9 Severability

The provisions of the contract are severable. The invalidity, or unenforceability of any one provision in the contract shall not affect the other provisions.

1-3.10 Interpretation

The parties acknowledge that the contract in its final form is the result of the combined efforts of the Contractor and City and that, should any provision of the contract be found to be ambiguous in any way, such ambiguity shall not be resolved by construing the contract in favor of or against either Contractor or City, but rather by construing the terms in accordance with their generally accepted meaning.

1-3.11 Cumulative Remedies

No remedy or election hereunder shall be deemed exclusive but shall, wherever possible, be cumulative with all other remedies at law or in equity.

1-3.12 No Third Party Beneficiaries

The rights, interests, duties and obligations defined within the Contract Documents are intended for the Contractor and City as the specific parties to the contract.

Notwithstanding anything stated to the contrary in the contract, it is not intended that any rights or interests in the contract benefit or flow to the interest of any third parties other than expressly identified within this section. The Contractor and the City do intend that in the event that the State of California is funding the project being constructed hereunder, that the State of California be a third party beneficiary under the contract and all rights, interest and benefits of the contract accrue to the State.

1-3.13 Funding

The contract is contingent on the appropriation of funds by City. Should funds not be appropriated, the contract may be terminated by City upon prior written notice to the Contractor.

1-3.14 Governing Law and Venue

The contract shall be governed by, and construed and enforced in accordance with, the laws of the State of California, excluding, however, any conflict of laws rule which would apply the law of another jurisdiction. Venue for purposes of the filing of any action regarding the enforcement or interpretation of the contract and any rights and duties thereunder shall be Fresno County, California.

1-3.15 Extent of Agreement

The Contractor acknowledges it has read and fully understands the contents of the Contract Documents. The Contract Documents represent the entire and integrated agreement between the parties with respect to the subject matter hereof and supersedes all prior negotiations, representations or agreements, either written or oral. The Contract Documents may be modified only by written instrument duly authorized

and executed by both City and Contractor in accordance with City's current contract change order resolution for public works of improvement as may be revised by City from time-to-time.

SECTION 2 – SCOPE AND CONTROL OF THE WORK

2-1 AWARD AND EXECUTION OF CONTRACT

Award and execution of contract will be as specified in the Bidding Requirements.

2-2 ASSIGNMENT OF PAYMENT

Contractor agrees she/he will not assign the payment of any monies due him/her from the City under the terms of this contract to any other individual(s), corporation(s), or entity(s). The City retains the right to pay any and all monies due Contractor directly to Contractor.

2-3 SUBCONTRACTS

As provided in Sections 4100 to 4113 inclusive of the California Public Contract Code, each bidder shall file with his/her bid the name and location of the place of business of each Subcontractor who will perform Work or labor or render service to the Contractor in or about the construction of the Work or improvement, or a subcontractor licensed by the State of California who, under subcontract to the prime contractor, specially fabricates and installs a portion of the work or improvement according to detailed drawings contained in the plans and specifications, in an amount in excess of one-half of one percent of the amount of the total bid or, in the case of bids or offers for the construction of streets or highways, including bridges, in excess of one-half of 1 percent of the Contractor's total bid or ten thousand dollars ($10,000), whichever is greater. Only one Subcontractor shall be listed for each portion of the Work, which portion shall be defined in the Proposal. In each instance, the nature and extent of the Work to be sublet or subcontracted shall be described. The failure of the bidder to specify a Subcontractor, or the listing of more than one Subcontractor for the same portion of the Work, constitutes an agreement by the bidder that she/he is fully qualified to perform that portion himself/herself, and that, if awarded the contract, she/he shall perform that portion himself/herself.

The Contractor shall not substitute any subcontractor in place of the Subcontractors designated in the original bid, without the consent of the City.

The subletting or subcontracting of any Work for which there was no subcontractor designated in the original bid and which is more than one-half of one percent of the Work, may be permitted
only in cases of public emergency or necessity, and then only after a written finding is made by the City setting forth facts constituting the emergency or necessity.

Violation of any of the above provisions is a violation of the contract, and the City may cancel the contract or assess the Contractor a penalty of not more than 10 percent of the subcontract involved. Notice and hearing shall be afforded the Contractor as required by Section 4110 of the California Public Contract Code.

All Persons engaged in the Work, including Subcontractors, will be considered under responsible control of the Contractor. The Contractor will be held responsible for their Work. The City will deal directly with, and make all payments solely to the Contractor.

The Contractor shall be responsible for the coordination of all trades, Subcontractors, and suppliers engaged upon the Work. Neither the City nor the Engineer will undertake to settle any differences between the Contractor and its Subcontractors or between Subcontractors.

When subcontracted Work is not being prosecuted in a manner satisfactory to the Engineer, the Contractor shall be notified to take corrective action within a specified time. If timely correction is not made, on receipt by the Contractor of written instructions from the Engineer the Subcontractor shall be removed immediately from the Work. The Subcontractor shall not be reemployed on the Work.

The Contractor shall comply with, and all contracts and subcontracts (all tiers) shall contain, the following provisions:

a) Prompt Progress Payment to Subcontractors A prime contractor or subcontractor shall pay a subcontractor not later than 7 days of receipt of each progress payment in accordance with Section 7108.5 of the California Business and Professions Code concerning prompt payment to subcontractors. Any violation of Section 7108.5 shall subject the violating contractor or subcontractor to the penalties, sanction and other remedies of that section. These requirements shall not be construed to limit or impair any contractual, administrative, or judicial remedies otherwise, available to the prime contractor or subcontractor in the event of a dispute involving late payment or nonpayment by the prime contractor, deficient subcontractor performance, or noncompliance by a subcontractor.

b) Prompt Payment of Withheld Funds to Subcontractors. The City will hold retainage from the prime contractor and shall make prompt and regular incremental acceptances of portions, as determined by the City of the contract work and pay retainage to the prime contractor based on these acceptances. The prime contractor or subcontractor shall return all monies withheld in retention from a subcontractor within 30 days after receiving payment for work satisfactorily completed and accepted including incremental acceptances of portions of the contract work by the City. Any delay or postponement of payment may take place only for good cause and with the City's prior written approval. Any violation of these provisions shall subject the violating prime contractor or subcontractor to the penalties, sanctions, and other remedies specified in Section 7108.5 of the California Business and Professions Code. These requirements shall not be construed to limit or impair any contractual, administrative, or judicial remedies otherwise available to the prime contractor or subcontractor in the event of a dispute involving late payment, or nonpayment by the prime contractor, deficient subcontractor performance, and/or noncompliance by a subcontractor.

2-4 CONTRACT BONDS

Before execution of the contract by the City, the Contractor shall file with the City Surety bonds approved by, and in the form provided by, the City in the amounts and for the purposes noted below, unless otherwise provided by the City of Fresno Municipal Code. Bonds shall be duly executed by a corporate Surety admitted by the California Insurance Commissioner to do business in the State. The Contractor shall pay all bond premiums, costs, and incidentals.

Each bond shall be signed by both the Contractor and Surety, and the signature(s) of the Surety notarized.

The Contractor shall provide two good and sufficient Surety bonds:

a) The “Payment Bond” shall be for not less than 100 percent of the Contract Price, to satisfy claims of material suppliers and of mechanics and laborers employed by Contractor on the Work. The bond shall be maintained by the Contractor in full force and effect until the Work is completed and accepted by the City, and until all claims for material and labor are paid, and shall otherwise comply with Chapter 7, Title XV, Part 4, and Division 3 of the California Civil Code.

b) The “Faithful Performance Bond” shall be for 100 percent of the Contract Price to guarantee faithful performance of all Work, within the time prescribed, in a manner satisfactory to the City, and that all materials and workmanship will be free from original or developed defects.

Changes in the Work, or extensions of time, made pursuant to the contract, shall not release the Contractor or Surety from their obligations. Notice of such changes or extensions shall be waived by the Surety.

2-5 PLANS AND SPECIFICATIONS AND INTENT OF THE CONTRACT DOCUMENTS

2-5.1 General

The Contractor shall keep at the Site a copy of the approved, signed, and stamped Plans and Specifications, to which the Engineer shall have access at all times. Note any field changes, positions of Utilities, etc.

When finalized, the intent of the Contract Documents is to include all items necessary for the proper execution and completion of the Work by Contractor. The Contract Documents are complementary, and what is required by one shall be as binding as if required by all. Performance by Contractor shall be required only to the extent consistent with the Contract Documents and reasonably inferable from them as being necessary to produce the intended results. All dimensions and clearances necessary to the Work, as indicated on the Plans and contained in the Specifications, shall be verified by Contractor at the Site before commencing the Work affected thereby. Additionally, if sufficient detailed information is lacking, if work is required in such a manner as to make it impossible to produce first-class Work, or if discrepancies appear among Contract Documents, then Contractor shall request the City's clarification or interpretation before proceeding with such Work.

Contractor also shall confirm from bench marks the physical surface characteristics of the Site indicated on the Plans, and report discrepancies discovered to City for adjustment before beginning Work. No extra charges or compensation will be allowed for grade variation or discrepancies except by written agreement before construction begins. Initiation of Work shall indicate Contractor's verification of existing grade elevations and acceptance of existing Site surface characteristics.

While it is intended that information pertaining to physical conditions which may affect the cost of the proposed work will be shown on the Plans or indicated in the Specifications, the City does not warrant the completeness or accuracy of such information. It is the Contractor's responsibility to ascertain the existence of any such

conditions affecting the cost of the Work which would have been disclosed by reasonable examination of the Site.

No test, investigation, statement or estimate of a factual situation incorporated, or not incorporated, in the contract shall be relied on by the Contractor. Any test, investigation statement or estimate of fact incorporated in the contract shall be considered by the Contractor to be a suggestion only and she/he shall request access to the underlying or background informative material or source and shall arrive at his/her own opinion thereon, including his/her determination of how reliable might be any conclusion appearing in (or inferred from) the contract.

When the Contractor has obtained or actually viewed any "as-built" or similarly final or accepted drawing or map of any facility constructed for and under inspection by the City, the Contractor may rely upon the drawing or map. No drawing or map obtained from, through or by the City of any facility installed on or off of public property by a private Person or Utility, and not by and for-the City, may be relied on by the Contractor; the accuracy of such documents must be questioned.

For convenience, these Specifications are arranged in the several sections indicated, but such separation shall not be considered as the limits of the Work required of any separate trade. The terms and conditions of such limitations are wholly between the Contractor and his/her Subcontractors.

In general, the drawings will indicate dimensions, position and kind of construction, and the written Specifications will indicate qualities and methods. Any Work indicated on the drawings and not mentioned in the written Specifications, or vice versa, shall be furnished as though fully set forth in both. Work not particularly detailed, marked or specified, shall be as similar parts that are detailed, marked or specified.

Figured dimensions on the scale drawings and the full size details shall govern.

Contractor represents to City that prior to submitting its bid and in a timely manner to allow for resolution by an addendum, Contractor (i) exercised due diligence in performing a constructability review of the Contract Documents in accordance with industry standards; (ii) submitted on the Bid Question Form in the Instruction to Bidders, for resolution by addendum, a request for clarification and stating in detail any lack of definition and all errors, omissions, conflicts and insufficiencies in the Contract Documents discovered during such constructability review; and (iii) obtained written assurances from each of his/her Subcontractors that they exercised the same due diligence in performing such a constructability review and submitted a Bid Question Form in accordance with the foregoing, either directly or through the Contractor. Prior to the commencement of the Work, the Contractor and each of his/her Subcontractors shall submit to the Engineer a written, signed report stating in detail any lack of definition, errors, omissions, conflicts and insufficiencies in the Contract Documents discovered since said constructability review and not reasonably discoverable in such a review. The report covering any subdivision of Work assigned to a Subcontractor shall be prepared and submitted by such Subcontractor through the Contractor, who shall execute on such report his/her approval thereof and shall submit it to the Engineer with the Contractor's report. If no deficiencies were discovered by the Contractor or any Subcontractor, a report shall be filed nevertheless, stating that fact. It shall be the duty of the Contractor to require each Subcontractor to comply with this subparagraph.

After receipt of the reports required by the subparagraph above, the Engineer shall promptly deliver his/her written instructions to the Contractor, resolving all deficiencies mentioned in the reports. The Contractor shall not proceed with any Work affected by any such deficiency prior to receipt by the Contractor of said written instructions.

If, during the course of the Work, any further errors, omissions, conflicts or insufficiencies in the Contract Documents shall be discovered by the Contractor or any Subcontractor, it shall be the Contractor's duty to report them promptly in writing to the Engineer and obtain his/her written instructions resolving such deficiencies before proceeding further with the Work affected thereby.

If the Contractor shall proceed with any Work affected by any deficiency required to be reported pursuant to this paragraph, after the discovery thereof and prior to receipt of or without complying with the Engineer's written instructions resolving such deficiency, the Contractor shall make any and all corrections in or replacement of such Work, and shall repair all damage to other Work caused by such correction or replacement, as shall be required, in the Engineer's opinion and at his/her order, to bring the Work into compliance with the Contract Documents as amended by the Engineer's written instructions, without claim against the City for additional compensation or additional time for completion of the entire Work.

Failure of the Contractor or any Subcontractor to diligently discover and report, in the manner required by this section, any deficiency in the Contract Documents affecting the Work which would necessarily have been discovered had either Contractor fulfilled its obligation under the contract to have carefully reviewed all of the Contract Documents prior to submitting the bid, or Contractor prosecuted the Work in the required thorough and first-class manner, shall not relieve the Contractor of responsibility. Any Work proceeded with under any deficient specification after the time when, in the exercise of the required diligence as aforesaid, such deficiency should have been discovered, the Contractor shall be liable for the correction or replacement thereof and the repair of any damage caused thereby to the same extent and subject to the same terms as for Work corrected or replaced under the subparagraph next above.

The Engineer will furnish additional details where necessary to more fully explain the Work, and same shall be considered a part of the contract. Full size details shall take precedence over scale drawings. Any Work done before receipt of such details, if not in accordance with same, shall be removed and replaced or adjusted, as directed, without expense to the City. Should any such details be, in the opinion of the Contractor, more elaborate than scale drawings and written Specifications warrant, written notice thereof shall be given to the Engineer within five Days of receipt of same. The notice will then be considered, and if justified, in the opinion of the Engineer, the details will be amended or the extra work authorized.

2-5.2 Precedence of Contract Documents

If any differences or conflicts within or between the Contract Documents were not called to the City’s attention by the Contractor prior to submission of bids, interpretations will be based on the following order of precedence of documents:

1. Rules and Regulations of Federal Agencies relating to the source of funds for the project.
2. Permits from agencies as may be required by law.
3. Supplemental Agreements, Change Orders, or contract the one dated later having precedence over another dated earlier.
4. Special Conditions.
5. Plans, Specifications and City Standard Drawings.
6. State Standard Drawings.

Change orders, supplemental agreements and approved revisions to Plans, City Standard Drawings and Specifications will take precedence over documents listed above.

Whenever any conflict appears in any portions of the contract, it shall be resolved by application of the order of precedence. As indicated above, the Plans and Specifications are to be of equal priority and the City Standard Specifications and City Standard Drawings are to be of equal priority. In the event of any internal inconsistency in either the Plans, Specifications or City standard Drawings, or with each other, the appropriate method of performing the Work, in the event of the above mentioned inconsistency, shall be determined by City. Figures take precedence over physical scale measurements. Large scale details take precedence over smaller scale details. Plans take precedence in regard to dimensions, when in conflict with mechanical and structural drawings, except for the size of the structural members. Specifically titled Plans and City Standard Drawings, and specifically titled sections of the Specifications take precedence over indication of the item in a collateral way. For dimensions, existing conditions take precedence over Plans, Specifications, City Standard Drawings and State Standard Drawings. In the event of inconsistencies within any other particular Contract Document, Contractor shall (i) provide the better quality or greater quantity of Work, or (ii) comply with the more stringent requirement; either or both in accordance with the City's interpretation.

Work not covered in the Contract Documents will not be required unless it is consistent therewith and is reasonably inferable therefrom as being necessary to produce the intended results. For purpose of this provision, "reasonably inferable" shall include any change resulting in no more than non-material additional costs to the Contractor, minor submittals by the Contractor without additional design, and minor changes in sequencing and scheduling.

2-5.3 Shop Drawings

When shop drawings are required by the Specifications or requested by the Engineer, they shall be prepared in accordance with modern engineering practice at the Contractor's expense. Unless otherwise specified, six copies of shop drawings shall be submitted to the Engineer for approval or correction at least 30 Days before approved drawings will be required for the Work. One set will be returned to the Contractor marked "approved" or "approved as corrected". If changes are required, 6 copies of corrected shop drawings shall be delivered to the Engineer.

Shop drawings shall be of a size and scale to clearly show all necessary details.

For items requiring shop drawings, no materials shall be furnished or Work done before approval of the drawings.

Approval of shop drawings by the Engineer is interpreted to mean that there is substantial and acceptable conformance with the contract Plans, but details of design may not necessarily be checked for adequacy or accuracy. Such approval shall not relieve the Contractor from the responsibility for errors or omissions in the shop drawings or from deviations from the Contract Documents unless such errors, omissions, or deviations were specifically called to the attention of the Engineer. The Contractor shall be responsible for the correctness of the shop drawings, for shop fits and field corrections, and for the results obtained by use of such shop drawings.

2-6 WORK TO BE DONE

The Contractor shall perform all Work necessary to complete the contract in a first class manner and satisfactory to City. Unless otherwise provided, the Contractor shall furnish all materials, equipment, tools, labor and incidentals necessary to complete the Work.

2-7 SUBSURFACE DATA

All soil and test hole data, water table elevations, and soil analyses shown on the drawings or included in the Specifications apply only at the location of the test holes and to the depths indicated. Soil test reports for test holes which have been drilled are available for inspection at the office of the Engineer. Any additional subsurface exploration shall be done by bidders or the Contractor at their own expense.

The indicated elevation of the water table is that existing at the date the test hole data was determined. It is the Contractor's responsibility to determine and allow for the elevation of ground water at the date of performing the Work. A difference in elevation between ground water shown in soil boring logs and ground water actually encountered during construction will not be considered as a basis for extra work.

See Section 2-5.1 concerning reliance on data, tests and analyses.

2-8 RIGHT-OF-WAY

Right-of-ways or easements for the improvement as shown on the Plans will be provided by the City. Unless otherwise provided, the Contractor shall make his/her own arrangements, pay for, and assume all responsibility for acquiring, using, and disposing of additional Work areas and facilities temporarily required by him/her. She/He shall indemnify and hold the City harmless from all claims for damages occasioned by such actions.

The Contractor shall notify all property owners in writing along the public right-of-way 96 hours in advance of construction as to when, how, and how long they will be affected. The Letter of Notification shall also give the name of the person representing the Contractor and his/her telephone number. The letter shall be prepared and delivered by the Contractor.

2-9 SURVEYING

2-9.1 Permanent Survey Markers

The Contractor shall notify the Engineer at least 7 Days before starting Work in order that the Engineer may take necessary measurements to ensure the preservation of permanent survey monuments and bench marks. The Contractor shall not disturb permanent survey monuments or bench marks without the consent of the Engineer, and shall bear the expense of replacing any that may be disturbed without permission. Replacement shall be done only by the Engineer.

When a change is made in the finished elevation of the pavement of any Roadway in which a permanent survey monument is located, the Engineer will adjust the monument cover to the new grade unless otherwise specified.

2-9.2 Lot Stakes

The Contractor shall preserve property line and corner survey markers except where their destruction is unavoidable, and the Contractor is proceeding in accordance with accepted practice. Markers that otherwise are lost or disturbed by his/her operations shall be replaced at the Contractor's expense by a registered civil engineer allowed to reset property corners or by a licensed land surveyor.

2-9.3 Survey Services

Surveying adequate for construction will be done by the Engineer except for private contracts. The Contractor shall be responsible for preserving construction survey stakes and marks for the duration of their usefulness. If any construction survey stakes are lost or disturbed and need to be replaced, such replacement shall be by the Engineer at the expense of the Contractor.

The Contractor shall notify the Engineer at least 2 working days before she/he will require survey services in connection with laying out of any portion of the Work. The Contractor shall dig all holes necessary for line and grade stakes.

Normally, stakes will be set and stationed by the Engineer for curbs, headers, Sewers, Storm Drains, structures, and rough grade and a corresponding cut or fill to finished grade (or flow line) indicated on a grade sheet.

2-9.4 Private Engineers

Surveying by private engineers on work under the control of the City shall conform to the quality and practice required by the Engineer. The Engineer shall be notified before the stakes are set. Private engineers are required to furnish cut sheets to the Engineer immediately upon the setting of the grades.

2.9-5 Line and Grade

All Work upon completion shall conform to the lines, elevations and grades shown on the Plans.

Three consecutive points set on the same slope shall be used together so that any variation from a straight grade can be detected. Any such variation shall be reported to the Engineer. In the absence of such report, the Contractor shall be responsible for any error in the grade of the finished Work.

Grades for underground conduits will be set at the surface of the ground. The Contractor shall transfer them to the bottom of the trench.

2-10 CITY SUPERVISION AND INSPECTION

The Work will be done under the Supervision of the Engineer. The Engineer may specify the Work sequence to the extent necessary to obtain the best results and to protect the City's interests. The Contractor shall promptly comply with instructions from the Engineer or his/her authorized representative.

The Engineer's approval of construction schedule will be given only if she/he is satisfied that the Contractor's construction schedule is sufficiently detailed to show clearly the Work to be completed during each month and, if adhered to, will be substantially sufficient to assure the completion of the Work within the time for completion set forth in the Specifications, and only if, in his/her opinion, the cost breakdown fairly apportions the Contract Price to the value of the Work and is in sufficient detail to provide a workable basis for progress payments. When the specific conditions require, the Contractor's construction schedule, in the form and content as finally approved by the Engineer, shall be incorporated in and be thereafter a part of the Specifications, and shall be the schedule on which the Work shall progress, and all progress payments shall be computed on the basis of the cost breakdown therein. The Contractor agrees to complete each monthly segment of the Work no later than the date specified in the construction schedule for completion thereof and the Contractor agrees not to deviate from said schedule without having first obtained the written approval of the Engineer.

All Work and materials are subject to inspection and approval of the Engineer. The Contractor shall notify the Engineer before noon of the working day before inspection is required. Unless otherwise authorized, Work shall be done only in the presence of the Engineer or his/her authorized representatives. Any Work done without proper inspection will be subject to rejection. The Engineer and his/her authorized representatives shall at all times have access to the Work during its construction at shops and yards as well as the project Site. The Contractor shall provide every reasonable facility for ascertaining that the materials and workmanship are in accordance with these Specifications. Inspection of the Work shall not relieve the Contractor of the obligation to fulfill all conditions of the Contract.

No oral or telephonic agreement or conversation with any officer, agent, or employee of the owner or the Engineer, or with the Engineer, either before or after execution of the Contract, shall affect or modify any of the terms or obligations contained in any of the Contract Documents.

The Contractor shall pay the City for all overtime inspection direct costs, unless the charges for such inspection have been expressly waived in the Special Conditions. Overtime inspection charges will be made for all inspections on Saturdays, Sundays, and City holidays, and hours worked by the City inspector other than those of the normal City working day.

2-11 MATERIALS ACCEPTANCE TESTING

Acceptance testing of materials provided during construction of improvements within the City right-of-way and City-owned facilities is a key activity to protect the City's interests. The purpose of acceptance testing is to demonstrate that the materials provided by contract will perform as designed, resulting in the proper function, design life and maintainability of the various improvements that are constructed.

Firms that perform acceptance testing within the City right-of-way are subject to all labor and business practices requirements which include, but are not limited to, prevailing wage requirements, OSHA standards, and workers' compensation requirements.

The following requirements are to be utilized in conducting materials acceptance testing for soils, aggregate materials and asphalt concrete.

2-11.1 Pre-Project Approval of Testing Firms

Only firms with qualified personnel and well maintained equipment can be utilized to provide acceptance testing. To assist in selecting qualified firms, the City will maintain a list of qualified local firms that can be utilized. However, for smaller projects, a procedure to provide temporary approval of non-local firms to provide acceptance testing for individual projects is provided.

1. Approval of Local Firms

The City Public Works Department will maintain a list of qualified local firms that can be utilized by public agencies and private enterprises to provided acceptance testing. The City Public Works Department has a procedure to evaluate minimum standards for qualified personnel and supervision, testing equipment and facilities, and professional liability insurance. The Engineer reserves the right to add or remove firms based on the results of this evaluation and/or project performance. Acceptance testing provided by firms that are not included on the approved list, or are removed for poor performance, or do not meet the requirements for a temporary approval will not be allowed.

Firms can apply to be included on the Approved Local Testing Firm List by contacting the Construction Management Office (559-621-5600) and submitting to the approval process. Developers and Contractors can obtain the updated list by contacting the Construction Management Office (559-621-5600).

2. Single Project Temporary Acceptance

A procedure for Developers and Contractors to utilize non-local firms to provide testing for single projects will be provided. Methods used to evaluate the firm's qualifications can include any or all of the following at the discretion of the Engineer:

A. Reciprocity to certification programs such as AASHTO R18 or CALTRANS METS for the appropriate materials;
B. Reciprocity in a similar local agency's testing qualification program; and

C. Adequate Statement of Qualifications submittal.

Temporary acceptance will be provided for no more than 1 project within 6 months. Firms who request to provide more frequent testing than temporary acceptance allows, will have to meet the requirements for qualifying to be placed on the City Department of Public Works Qualified Firms List.

2-11.2 Pre-Construction

If it is determined by the City Public Works Department that acceptance testing is required, the City Construction Management Division will require a letter from an approved testing firm stating:

1. The "*Firm*" has been retained by "*Owner*" to provide acceptance testing on the "*Project.*"

2. The firm will provide acceptance testing that meets or exceeds the minimum requirements provided in the latest edition of the City Standard Specifications;

3. The firm accepts the responsibility to provide the level of service required to make the conclusion that the soils and materials used to construct the project met minimum City standards and/or improvement Plans approved by the City Public Works Department at the completion of the project;

4. The letter will be required to be signed by the registered professional engineer of record responsible for the testing.

This letter designating the qualified firm will be required prior to approval of the Street Work permit by the Engineer.

2.11-3 Execution of Acceptance Testing

The Developer/Owner, or designated representative, will coordinate testing services, verify that testing is being conducted, respond to remedy sub-standard materials test results, and provide payment for testing services. The approved testing firm will provide qualified personnel to conduct tests, maintained accurate materials testing equipment, and provide prompt test results to the Developer/Owner, Contractor, and City representatives. The following sections describe the scope of acceptance testing required, the minimum frequency of tests, and the methods approved for use.

The following sections provide the approved test methods and the minimum frequency of tests. The City reserves the right to require additional testing or direct that specific locations or materials be tested to confirm compliance with City standards.

Approved Test Methods

1. Moisture/Density relationship for soils – ASTM D 1557-91
2. Moisture/Density relationship for aggregate base – CTM 216
3. In-Place Density – ASTM D 1556 (sand cone), ASTM D 2922 (nuclear methods)
4. Soil Moisture Content – ASTM D2216 (lab oven), ASTM D 3017 (nuclear methods)
5. Grain Size Distribution – ASTM D422, CTM 202
6. Resistance Value (R-Value) – CTM 301, ASTM D 2844
7. Sand Equivalent (SE) – CTM 217
8. Durability Index – CTM 229
9. In-Place Density and Compaction of AC pavement – CTM 375
10. AC core bulk density CTM-308

Drive cylinder method (ASTM D 2937) or other alternative test methods shall only be used when approved by the City Project Inspector.

Trench Compaction

The minimum frequency for all trenches within the right-of-way is one in-place density test per 24 inches of depth, per 150 lineal feet of trench. One test per 500 feet must be in the pipe zone bedding. One test per 24 inches of depth must be provided for trenches shorter than 150 feet. In the upper 2 feet, at least one test per 50 lineal feet shall be conducted. Where multiple Sewer laterals are installed, a minimum of one in-place density test every two laterals shall be taken between the main and the right-of-way boundary. Also, for manhole backfill, at least one in-place density test per 24 inches of depth shall be taken (i.e. for 7 foot deep manhole, 14 tests will be required).

Moisture/Density relationship curves shall be conducted for each different material encountered. A minimum of one check point test per 1,000 lineal feet of Roadway shall be conducted to verify that materials are consistent, or as needed if soil conditions change.

As-Graded R-Value Tests

Prior to fine grading for pavement subgrade and after all underground Utilities are installed, R-values shall be collected from the materials representative of the fine graded condition. These tests are required to be conducted to verify that the subgrade solid are consistent with the design R-value used for pavement thickness reported on the Plans.

R-Value samples representative of the subgrade materials shall be collected at a rate of one test per 100,000 square feet of planned pavement, two tests minimum for 50,000 to 100,000 square feet of pavement, and one test for planned pavement areas less than 50,000 square feet. An R-value sample shall be collected at each location where a residential Street intersects a Collector or Arterial. The locations of the R-value must be approved by a City Construction Management Division representative prior to collecting samples and conducting the tests.

The R-value results shall be reported to the City Construction Management Division including a map noting sample locations, comparison to the design R-value, and conclusions about the adequacy of the design R-value based on the results. If any R-value result is less than that used for the design, the pavement subgrade elevation and AB section thickness shall be adjusted based on the actual subgrade R-value results in accordance with the flexible pavement design procedure provided in Section 600 of the CALTRANS Pavement Design Manual.

Subgrade for Pavement, Curb/Gutter and Sidewalk

The minimum frequency of in-place density tests for subgrade soils are as follows:

Curb and Gutter –	One 6-inch deep in-place density test per 250 lineal feet
Sidewalk –	One 6-inch deep in-place density test per 250 lineal feet
Pavement –	One 6-inch deep in-place density test per 250 lineal feet per 12 foot wide lane (includes park lanes)

Moisture/Density relationship curves shall be conducted for each different material encountered. At least one check point test per 1,000 lineal feet of Roadway shall be conducted to verify that materials are consistent.

Aggregate Base

Quality tests (gradation, R-value, SE and durability) shall be collected at a rate of 1 test per 2,000 tons placed.

For placed material, take at least one 6-inch deep in-place density test per 250 lineal feet per 12 foot wide lane (includes park lanes)

Moisture/Density relationship curves shall be conducted for each different AB material encountered. A minimum of one check point test per 1,000 lineal feet of Roadway shall be conducted to verify that materials are consistent.

Asphalt Concrete (AC)

Conduct oil content and extraction gradation tests at a rate of 1 test per 500 tons, or 1 test for all materials placed per Day less than 500 tons, with a maximum of 2 tests per Day. Results shall be compared to the submitted AC mix design. At least one sample per Day shall be collected and the maximum density determined.

Following paving, cores of the completed AC mat shall be collected at a rate of at least three samples per 1,500 lineal feet of completed Roadway; or a minimum of one per project more than 500 lineal feet and less than 1,500 lineal feet. The density and thickness of core samples shall be measured in the

laboratory in accordance with CTM 308. The relative compaction of AC materials shall be a minimum of 95 percent.

Portland Cement Concrete (PCC)

Conduct materials acceptance test of PCC using the methods and frequencies specified in the project Plans and Specifications or the City of Fresno Quality Assurance Program Manual, whichever is more stringent.

Reporting

Progress reports will be required at selected milestones in the Work. The following table presents the required reports and the time that the reports must be completed. These reports are required to be submitted to the City Construction Management Division representative and approved prior to proceeding with the next phase of Work.

Required Progress Report	Submitted and Approved Before
Trench Compaction	Aggregate Base Placement
As-Graded R-values	Aggregate Base Placement
Street Subgrade Compaction	Aggregate Base Placement
Curb/Gutter, Sidewalk Subgrade	Concrete Placement
Aggregate Base Compaction	Respective AC or PCC Placement
AC Test Results	Any Final Acceptance or Bond Reduction

All reports are required to be signed and stamped by the engineer of record who is responsible for the Work.

Reports shall show all failing tests and corresponding re-test, dates of tests, and the supporting information specified by the approved testing procedure. Any report that does not meet these criteria is subject to rejection, and any approval of the next phase of Work will be delayed until the report is revised with the required information.

2-11.4 Post Construction

At the completion of the Work requiring acceptance testing, the testing firm shall provide a final report with the conclusion that all soils, aggregate base, and asphalt concrete within the right-of-way was installed in accordance with the Plans and Specifications. The Work will not be considered final until a final report acceptable to the Engineer is provided.

2-11.5 Quality Control of Acceptance Testing

The Engineer reserves the right to reject any acceptance testing that is found to not represent the actual condition provided. To verify adequate acceptance tests, the Engineer can retain another qualified firm to test any materials to verify compliance with City Standard Specifications. If acceptance testing is found to be substantially non-compliant at any point after a progress report indicating passing tests is received,

the Developer/Owner and Contractor shall comply with any Engineer demand for any or all of the following:

1. The materials be reworked or replaced to meet City Standard Specifications;

2. The testing firm be removed from the approved list, thereby making the firm ineligible to provide materials acceptance testing for future work; and

3. The Developer/Owner, Contractor and testing firm shall be liable and pay City for any damages, costs and increased maintenance caused by the inadequate testing program. This shall include, without limitation, costs of City's verification testing and any subsequent testing by the City. The damages, costs and increased maintenance shall be deducted by City from any amount to be paid to the Contractor by City.

SECTION 3 – CHANGES IN WORK

3-1 CHANGES REQUESTED BY THE CONTRACTOR

Changes in methods of construction previously proposed and accepted by City, or contained in the Specifications, may be made at the Contractor's request upon written approval of the Engineer.

Changes in the Plans and Specifications, requested in writing by the Contractor, which do not materially affect the Work and which are not detrimental to the Work or to the interests of the City, may be granted to facilitate the Work, when approved in writing by the Engineer. Contractor's request shall include a detail of any cost savings anticipated by the requested change.

3-1.1 Payment for Changes Requested by the Contractor

If such changes are granted, they shall be made at a reduction in cost, or at no additional cost to the City, as determined by the City. Nothing herein shall be construed as granting a right to the Contractor to demand acceptance of such changes.

3-2 CHANGES INITIATED BY THE CITY

At any time during the progress of the Work, and without in any way rendering void the Contract, the City may order alterations in and additions to or deductions from, the Work, and, when so ordered in writing, the Contractor shall proceed with the changes directed in such order.

The Contractor shall not be entitled to any extension of time for the completion of the Work by virtue of any change order unless, with respect to a change order executed by the Contractor, the change order specifically provides therefor, or, with respect to a change order not so executed, the Contractor, within five Days after receipt of the order, files a written claim therefor with the Engineer, in which event she/he shall be entitled to a reasonable extension of time as determined by the Engineer.

3-2.1 Payment for Changes Initiated by the City

3-2.1.1 Agreed Prices

The Contractor and the City may agree upon Contract Unit Prices or lump sums which shall be used to increase or decrease the Contract Price on account of any change ordered. In the absence of any such agreement the Contract Price shall be adjusted as hereinafter provided.

3-2.1.2 Unit Prices

Whenever an item of Work or materials is specified in the contract by a Contract Unit Price and is changed by not more than twenty-five percent of the Engineer's estimate as contained in the Specifications, then the Contract Price shall be increased or decreased by the application of the Contract Unit Price so specified. Contract Unit Prices shall govern not only for alterations in, and additions to or deductions from, the Work in connection with the structures and

installations covered by the written Specifications and drawings, but also for other Work incidental or necessary to the use of such structures and installations for which written Specifications and drawings may be later prepared.

Whenever said change exceeds said twenty-five percent, the addition or subtraction from the Contract Price shall be established under Section 3-2.1.3.

3-2.1.3 Formula for Prices

With respect to each change ordered for which no adjustment in Contract Price has been agreed upon, and for which Contract Unit Prices are not applicable, the Contractor shall keep, and submit to the Engineer at such intervals as the Engineer may direct, an accurate and complete account and record, certified and verified in such manner as the Engineer shall direct, of each of the following to the extent that they are directly the result of the change ordered:

(1) The actual cost of all direct labor performed (including the pro-rata cost of foremen continuously employed on the Work, but not the salary, or any part thereof, of the Contractor's superintendent), and all materials and equipment furnished and incorporated in the Work, less all available cash, trade, and other discounts.

(2) The actual cost of rental for the use of such items of equipment as have an individual value in excess of three hundred dollars, provided that the use of such equipment and the rental rate therefor, shall first have been authorized and approved by the City in writing.

(3) The actual cost of all royalties and permit fees.

In determining the net increase or decrease in the Contract Price as the result of the change ordered, the Engineer shall compute the total amount, if any, of the actual costs specified in (1), (2), and (3) above to the extent that they are accurately reflected in the account and record of the Contractor, and the Engineer shall estimate the amount, if any, by which any change ordered would result in a decrease in any of the items of cost specified in (1) , (2) , and (3) above, and to the net difference between these two amounts she/he shall add a sum equal to twenty per cent thereof for all overhead and profit. If the net amount so determined represents an addition in cost, it shall be added to the Contract Price, and if it represents a decrease in cost, it shall be deducted therefrom, and, in either case, it shall constitute compensation in full for the addition or full settlement of the amount to be deducted, as the case may be, for the change ordered.

3-2.1.4 Limited City Power

The Contractor recognizes that the City is a public agency and that it can act only through its duly authorized agents, and in this regard agrees that only written change orders, executed as specifically authorized by the Council, shall be valid. The Engineer shall have no authority to issue a change order unless so specifically authorized, and no person shall have authority to issue any oral

change order. Unless a valid change order is issued therefor, all changes in the Work performed by the Contractor shall be at his/her own risk, and she/he shall not be entitled to any additional compensation on account thereof, and she/he may be required to make the Work conform to the Plans and Specifications. No act or series of acts by the City during the course of the contract shall be deemed to constitute a waiver of the right of the City to rely upon the provisions of this subparagraph.

3-2.1.5 Changes in Accordance with Specifications

Each change ordered shall be performed in accordance with the Plans and Specifications insofar as they may be applied without conflict with the conditions set forth in the change order.

3-3 EXTRA WORK

3-3.1 General

New or unforeseen work will be classed as "extra work" when the Engineer determines that it is not covered by lump sums, Contract Unit Prices or stipulated unit prices and the character of such work is substantially different from that on which the Contractor bid.

Should the Contractor encounter conditions materially different from those indicated by the Plans and Specifications, or materially different from conditions generally recognized as inherent in the kind of Work being performed, she/he shall immediately notify the Engineer, who will promptly investigate. If conditions do materially differ in a way that the Contractor could not reasonably have foreseen and cause a decrease or increase in the Contractor's cost of, or the time required for, performance of any part of the Work, a change order will be issued for an appropriate adjustment in contract time and cost pursuant to this section; but the Contractor is not relieved of his/her responsibility to foresee such conditions as may be discovered by a reasonable examination of the Site or materials available regarding the Site or the Work, including performance of due diligence as required in Sections 2-5.1 and 7-15 of these City Standard Specifications.

Payment for extra work will be established by agreement between the Contractor and City. If no agreement can be reached, payment will be made by force account as provided in Section 9-1.04 of the State Standard Specifications:

1) The Contractor shall maintain records sufficient to distinguish the direct cost of extra work from the cost of other operations.

2) The Contractor shall prepare daily reports of extra work. The daily reports shall be signed by the City Inspector on a daily basis.

3-4 CHANGE ORDERS AND DISPUTED WORK OR COSTS

If unable to reach agreement under any of the foregoing procedures, the City may direct the Contractor to proceed with the Work. Payment shall be as later determined by the Claims and Disputes procedure provided for by the City in the Contract Documents. Although not to be

considered as proceeding under extra work provisions, the Contractor shall keep and furnish records of disputed work in accordance with Subsection 3-3.

SECTION 4 – CONTROL OF MATERIALS

4-1 MATERIALS AND WORKMANSHIP

4-1.1 General

All materials, parts and equipment furnished by the Contractor in the Work shall be new, high grade, and free from defects. Workmanship shall be in accordance with generally accepted standards of the construction industry. Materials and workmanship shall be subject to the Engineer's approval.

Materials and workmanship not conforming to the requirements of these City Standard Specifications shall be considered defective and will be subject to rejection. Defective work or material, whether in place or not, shall be removed immediately from the Site by the Contractor, at his/her expense, when so directed by the Engineer.

If the Contractor fails to replace any defective or damaged Work or material after Notice from the Engineer, the Engineer may cause such Work or materials to be replaced. The replacement expense shall be deducted from the amount to be paid to the Contractor. Used or secondhand materials, parts and equipment may be used only if permitted by the Special Conditions.

4-1.2 Protection of Work and Materials

The Contractor shall provide and maintain storage facilities and employ such measures as will preserve the specified quality and fitness of materials to be used in the Work. Stored materials shall be reasonably accessible for inspection by the City. The Contractor shall also adequately protect new and existing Work and all items of equipment for the duration of the contract.

The Contractor shall not, without the City's prior written consent, assign, sell, mortgage, hypothecate, or remove equipment or materials which have been installed or delivered and which may be necessary for the completion of the contract.

For projects that include installation of a water main, all pipe, fittings, valves and accessories shall be loaded and unloaded with hoists or skidding in order to avoid shock or damage. Under no circumstances shall such material be dropped. Pipe handled on skidways shall not be rolled or skidding against pipe on the ground. Gaskets for push on joints to be stored shall be placed in a cool location out of direct sunlight.

4-1.3 Inspection Requirements

Unless otherwise specified, inspection is required at the source for such typical materials and fabricated items as bituminous paving mixtures, structural concrete, metal fabrication, metal casting, welding, concrete pipe manufacture, protective coating application, and similar shop or plant operations. Steel pipe in sizes less than 18 inches, vitrified clay and cast iron pipe in all sizes are acceptable upon certification as to compliance with the Plans and Specifications, subject to sampling and testing by the City. Standard items of equipment such as electric motors, conveyors, elevators, plumbing fixtures, etc. are subject to inspection at the Site only. Special items of

equipment such as designed electrical panel boards, large pumps, sewage plant equipment, etc., are subject to inspection at the source, normally only for performance testing. The Special Conditions may specify inspection at the source for other items not typical of those listed in this subsection.

4-1.3.1 Inspection of Materials Not Locally Produced

When the Contractor intends to purchase materials, fabricated products, or equipment from sources located outside the jurisdictional area of the City, the provisions of this subsection 4-1.3 shall be invoked at the option of the City.

4-1.3.2 Inspection by the City

Should the City elect to make its own inspection at the source, the salaries for City personnel on an 8-hour Day and 40-hour week, and costs for normal commuting mileage, will be paid by the City. The Contractor shall reimburse the City at rates established by the City for all-costs in excess of the foregoing which arise from providing this inspection service. For private contracts, all costs of inspection at the source, including salaries and mileage costs, shall be paid by the permittee.

4-1.3.3 Inspection by Others

When the City does not elect to make its own inspection at the source, an inspector or accredited testing laboratory approved by the Engineer, shall be engaged by the Contractor at his/her expense to inspect the materials, equipment, or process. The approval of inspection services shall be obtained before producing any material or equipment. The inspector or representative of the testing laboratory shall judge the materials by the requirements of the Plans and Specifications. She/He shall forward reports required by the Engineer to the City. No materials or equipment shall be shipped nor shall any processing, fabrication, or treatment of such materials be done without proper inspection by the approved agent. These materials shall be subject to re-inspection at the Site.

4-1.4 Tests of Materials

Before incorporation in the Work, the Contractor shall submit samples of materials, as the Engineer may require, at no cost to the City. The Contractor, at his/her own expense, shall deliver the materials for testing to the place and at the time designated by the Engineer.

The Contractor shall notify the City in writing at least 15 Days in advance, of the Contractor's intention to use materials for which tests are specified, to allow sufficient time to perform the tests. The notice shall name the proposed supplier and source of material.

Contractor will pay the costs of all testing, except as otherwise provided herein or in the Contract Documents. The Contractor will remain responsible for paying the costs necessary to test materials and supplies required of and supplied by the Contractor under the terms of the contract. Such testing of the materials and supplies is to be

made to determine whether or not such materials or supplies meet the terms of the contract. The Contractor shall be responsible for paying the costs for all tests of any kind made to test materials or Work which have failed to meet the terms of the contract when so determined by the Engineer, and for all tests required to test the replacement materials or Work. For private contracts, the testing expense shall be borne by the permittee.

4-1.5 Trade Names or Equals

It is the intent of these Specifications to permit the Contractor to supply any of the materials specified or offer an equivalent. The Engineer shall determine whether the material offered is equivalent to that specified. Adequate time shall be allowed for the Engineer to make this determination. The specified contract completion time shall not be affected by any circumstance developing from the provisions of this subsection.

If brands or manufacturers are used or listed in conjunction with products, equipment or materials in the Specifications without the words “or equal,” equals are allowed, except where wording “No Substitution Allowed” expressly appears. Except in those instances where the product is designated as “No Substitution Allowed,” bid Specifications will list at least two brands or trade names of comparable quality or utility followed by the words “or equal.” Where “or equal” is allowed for any product, equipment or materials, it must meet all the requirements of the bid Specifications to the satisfaction of the City and must be in current production. For any “or equal,” Contractor shall make submittals after Notice to Proceed for evaluation, unless otherwise required in the Bid Requirements.

The Contractor shall, at his/her expense furnish data concerning items offered by him/her as equivalent to those specified. She/He shall have the material tested as required by the Engineer to determine that the quality, strength, physical, chemical, or other characteristics, including durability, finish, efficiency, dimensions, service, and suitability are such that the item will fulfill its intended function.

Test methods shall be subject to the approval of the Engineer. Test results shall be reported promptly to the Engineer, who will evaluate the results and determine if the substitute item is equivalent. The Engineer’s findings shall be final. Installation and use of a substitute item shall not be made until approved by the Engineer.

If a substitute offered by the Contractor is found not to be equal to the specified material, the Contractor shall furnish and install the specified material.

4-1.6 Compaction Tests

Relative compaction of soil in trenches, embankment or structural backfill shall be determined by the laboratory standard of test procedure ASTM D1557. To be considered a “passing” test, compaction tests shall meet the required relative percent compaction and indicate moisture content within 2% of optimum. The moisture content within 2% of optimum is generally required, but in some instances may be considered a goal. In some instances, 2% moisture cannot be achieved; however, the Contractor shall try to get as close to 2% moisture as possible. Drive-tube sampling of compacted soil may be utilized, unless otherwise directed by the Engineer. For projects where the City is responsible for coordinating materials acceptance testing by contract, the

Contractor shall give notice to the Engineer 2 working days in advance of when the required compaction tests are to be taken. The initial compaction tests will be taken at the expense of the City. Any further tests needed because of failure to pass the original test shall be at the expense of the Contractor. Test methods and frequencies shall be performed in accordance with Section 2-11 of these City Standard Specifications. Also, the Engineer may specify the locations where acceptance tests are to be taken.

For Projects where the Developer is to coordinate and pay for materials testing by the subdivision or parcel map agreement, the Developer or his/her agent shall conduct materials acceptance testing in accordance with Section 2-11 of these City Standard Specifications.

SECTION 5 – UTILITIES

5-1 LOCATION

The City will, in the case of cash contracts and contracts funded by an assessment district(s), search known records and indicate on the Plans those Utilities, except Service Connections, which may affect the Work. All available information regarding removal, relocation, or disconnection of Utilities will be included in the Plans and Specifications. The Contractor shall immediately report to the Engineer those Utilities omitted from the Plans or found substantially at variance with the location shown.

At least 2 working days before entering on the Work, the Contractor shall request Utility owners to mark or otherwise indicate the location of their substructures, except for public Storm Drains. It shall be the Contractor's responsibility to determine the true location and depth of all Utilities and Service Connections. She/He shall also familiarize himself/herself with the type, material, age and condition of any Utility which may be affected by the Work. The Contractor shall contact Underground Service Alert (USA) at 1-800-227-2600 or 8-1-1.

5-2 PROTECTION

The Contractor is responsible for protection of all Utility mains, services and other facilities within the limits of Work. Responsible diligence will have been exercised on all City contracts in locating Utilities as provided in section 5-1 above, but the Contractor is responsible for checking in the field the locations as shown and is further responsible for the protection of any and all Utilities whose presence or location is unknown. The Contractor shall not interrupt the service function or disturb the supporting base of any Utility, without authority from the Utility owner or written order from the City. All valves, switches, vaults, and meters shall be maintained readily accessible for emergency shutoff.

Where protection is required to ensure support of Utilities located substantially as shown on the Plans or in accordance with other information in the Plans and Specifications, or for underground Service Connections, the Contractor shall, unless otherwise provided, furnish and place the necessary protection at his/her expense.

Upon learning of the existence and location of any Utility omitted from or shown incorrectly on the Plans, the Contractor shall immediately notify the Engineer and the Utility owner and be fully responsible for protecting such Utility.

The Contractor shall immediately notify the Engineer and the Utility owner if any Utility is disturbed, disconnected or damaged. The Contractor shall bear the costs of repair or replacement of any Utility damaged.

When placing concrete around or contiguous to any Utility, the Contractor shall, at his/her expense, furnish and install a cushion of expansion joint material, clear opening or sleeve, or by other suitable means shall prevent embedment in or bonding with the concrete.

5-3 REMOVAL

Unless otherwise specified, the Contractor shall remove all portions of interfering Utilities shown on the Plans as "abandoned" or "to be abandoned in place." Before starting removal operations, the Contractor shall ascertain from the Utility owner whether abandonment is

complete. The costs involved in the removal and disposal shall be absorbed in the Contractor's bid.

5-4 RELOCATION

When feasible, the owners responsible for Utilities within the area affected by the Work will complete their necessary installations, relocations, repairs, or replacements before commencement of Work by the Contractor. When the Plans or Specifications indicate that a Utility is to be relocated, altered or constructed by others, the City will conduct all negotiations with the owners and the Work will be done at no cost to the Contractor.

Utilities, found by the Engineer to interfere with the permanent project Work after award of the contract, will be relocated, altered, or reconstructed by the Utility owner(s), or the Engineer may order changes in the Work to avoid interference. Such changes will be paid for in accordance with Section 3-3.

When the Plans or Specifications provide for the Contractor to alter, relocate, or reconstruct a Utility, all costs for such Work shall be absorbed in the Contractor's bid. Temporary or permanent relocation or alteration of Utilities desired by the Contractor for his/her own convenience shall be his/her responsibility, and she/he shall make all arrangements and bear all costs. The Contractor may, for his/her own convenience or to expedite the Work, agree with the owner of any Utility to disconnect and reconnect interfering Service Connections. The City shall not be involved in any such agreement and the Contractor shall hold harmless and indemnify the City from all liability, damages and costs arising from such agreement.

5-5 DELAYS

The Contractor is responsible for notifying Utility owners in time to prevent delays attributable to Utility relocations, reconstructions or alterations. The Contractor shall not be entitled to damages or additional payment if such delay does occur. The Engineer will determine the extent of the delay attributable to such interference, the effect of the delay on the project as a whole, and any commensurate extension of time.

5-6 COOPERATION

When necessary as determined by the Engineer, the Contractor shall so conduct his/her operations as to permit access to the Site and provide time for Utility work to be accomplished during the progress of the contract Work.

5-7 LIMITATIONS OF LIABILITY

Notwithstanding anything to the contrary in these City Standard Specifications, Plans or Specifications, the City and the Engineer shall not be responsible or liable with respect to the sufficiency or accuracy of the information or investigation of the location of Utility facilities made by it, or with respect to the actual or apparent location of all known Utility facilities as indicated on the Plans or Specifications, or with respect to unforeseen developments which may occur as to the location of such Utility facilities, or with respect to Utility facilities which may be encountered at places different from that indicated.

SECTION 6 – PROSECUTION, PROGRESS AND ACCEPTANCE OF THE WORK

6-1 CONSTRUCTION SCHEDULE AND COMMENCEMENT OF WORK

After notification of award and prior to the Notice to Proceed, the Contractor shall submit to the Engineer for approval his/her proposed construction schedule. The construction schedule shall be in the form of a tabulation, chart, or graph and shall be in sufficient detail to show the chronological relationship of all activities of the project including, but not limited to, estimated starting and completion dates of various activities, procurement of materials, and scheduling of equipment. The construction schedule shall reflect completion of all Work under the contract within the specified time in the Bidding Requirements and in accordance with these City Standard Specifications.

The Engineer shall decide all questions as to the quality or acceptability of materials furnished and Work performed, and as to the manner of performance and rate of progress of the Work; all questions as to the interpretation of the Contract; all questions as to the acceptable fulfillment of the contract on the part of the Contractor; and all questions as to claims for additional compensation on the part of the Contractor, claims for deductions from the Contract Price on the part of the City and the amount of compensation due at each payment period. The Contractor, without delaying the job, shall promptly comply with all decisions of the Engineer, and all directions and orders given by the Engineer, and the Engineer shall have the authority to enforce and make effective all such decisions, directives, and orders which the Contractor fails to promptly carry out. Unless a decision of the Engineer is fraudulent, capricious, arbitrary, or so grossly erroneous as necessary to imply bad faith, it shall be final and conclusive for all purposes.

Unless otherwise provided, the contract time shall commence upon issuance of a Notice to Proceed. The Work shall start and be diligently prosecuted to completion within the time provided in the Bidding Requirements.

If the Contractor desires to make a major change in his/her method of operations after commencing construction, or if his/her schedule fails to reflect the actual progress, she/he shall submit to the City a revised construction schedule in advance of beginning revised operations.

If included in the project, the first order of work shall be the installation of the water main. Contractor shall trench through existing pavement and no additional pavement areas beyond the normal trench width shall be removed. The Contractor may commence remaining work after obtaining satisfactory results for the pressure test(s) on the water main.
The Engineer may waive any or all of these requirements for Work constructed under permit.

6-2 PROSECUTION OF WORK

To minimize public inconvenience and possible hazard and to restore Streets and other Work areas to their original condition and former state of usefulness as soon as practicable, the Contractor shall diligently prosecute the Work to completion. If in the Engineer's opinion the Contractor fails to prosecute the Work to the extent that the above purposes are not being accomplished, the Contractor shall, upon orders from the Engineer, immediately take the steps necessary to fully accomplish said purposes. All costs of prosecuting the Work as described herein shall be absorbed in the Contractor's bid. Should the Contractor fail to take the necessary steps to fully accomplish said purposes after orders of the Engineer to do so, the

Engineer may suspend the Work in whole or in part until the Contractor takes said steps. With or without such suspension, the Engineer may cause such steps to be taken by force account or other means at the Contractor's expense.

As soon as possible under the provisions of these City Standard Specifications, the Contractor shall backfill all excavations and restore, to usefulness, all improvements existing prior to the start of the Work.

The Engineer may require open excavations to be fenced if in his/her judgment the situation presents a potential hazard to the public.

If Work is suspended through no fault of the City, all expenses and losses incurred by the Contractor during such suspensions shall be borne by him/her. If the Contractor fails to properly provide for public safety, traffic, and protection of the Work during periods of suspension, the City may elect to do so, and deduct the cost thereof from monies due the Contractor. Such action will not relieve the Contractor from any liability.

6-3 SUSPENSION OF WORK

The Work may be suspended in whole or in part, when in the Engineer's opinion the suspension is necessary in the interest of the City. The Contractor shall comply immediately with any written order of the Engineer suspending Work. Such suspension shall be without liability to the Contractor on the part of the City. Suspended Work shall be resumed upon written order of the Engineer.

6-4 DEFAULT BY CONTRACTOR

The Contractor is in material default of the contract in the event (i) the Contractor shall be adjudged a bankrupt or makes a general assignment for the benefit of creditors, (ii) a receiver shall be appointed on account of the Contractor's insolvency, (iii) the Contractor shall fail to make prompt payment to Subcontractors or for labor or materials, (iv) the Contractor shall fail to provide enough properly skilled workers or enough proper materials to ensure compliance with the construction time schedule, (v) the Contractor shall disregard instructions of the Engineer, or (vi) the Contractor violates any provision of the Contract Documents.

If the Contractor is in default, the City may give written Notice to the Contractor that if said default or defaults as specified in said Notice are not remedied within a specified time (which shall be not less than five Days from receipt of said Notice), the Contractor's control over the Work will be terminated. If any such default specified in said Notice is not remedied to the satisfaction of the City and the Engineer within the time specified in said Notice, the City may give the Contractor and Surety written Notice of termination, and on the date specified in such Notice the Contractor's control over the Work shall terminate.

Upon such termination, the City may enter upon and take possession of the entire Work and may also take possession, for the purpose of completing the Work, of all of the Contractor's tools, equipment and appliances upon the Work, and all materials on the Site or stored off-Site for incorporation into the Work; and the City may thereupon call upon and permit the Surety on any performance bond given to guarantee the performance of the contract to take over and complete the Work under the Contract, or the City may, at its sole option and without further Notice to anyone, take over and complete the Work by day labor or by contract entered into by negotiation or by competitive bidding or otherwise, as the City in its sole discretion shall elect.

After termination of the Contractor's control over the Work as herein provided, the Contractor shall not be entitled to any further payments under the contract until the entire Work thereunder has been fully completed and finally accepted by the City. After such completion and acceptance, if the unpaid balance of the Contract Price (as defined in the next paragraph) exceeds the sum of the amounts expended by the City in taking over and completing the Work (including, without limitation, all managerial and administrative expenses incurred by the City on account thereof) and the amount of all damages incurred by the City by reason of the Contractor's default, such excess shall be paid to the Contractor. However, if said sum exceeds said unpaid balance, the Contractor and his/her Surety shall be liable to the City for the difference. The expense incurred by the City in taking over and completing the Work, and the amount of any damage incurred by the City by reason of the Contractor's default shall be audited and certified by the Engineer, whose certificate thereof shall be binding and conclusive upon the parties.

For the purposes of the computations required by the paragraph above, the "unpaid balance of the Contract Price" shall be the original Contract Price as adjusted by any change orders issued prior to termination of the Contractor's control, less all payments made on account thereof prior to such termination, less all amounts withheld for liquidated damages or disputed work or claims prior to termination of Contractor's control, and less any and all amounts withheld or paid pursuant to stop notice-filed with the City upon claims of Subcontractors or others for equipment, labor or materials furnished to the Work by order of or contract with the Contractor.

Upon completion and acceptance of the Work, the Contractor shall be entitled to the return of all his/her materials not used in the Work, but without claim against the City for loss or damage with respect thereto, and shall be entitled to the return of all his/her equipment, tools and appliances taken possession of by the City, but without claim against the City for any charge for the use thereof or for usual and ordinary depreciation and wear and tear.

The remedies provided in this paragraph for default of the Contractor shall be in addition to, and the exercise thereof shall not be deemed a waiver by the City of, any other rights and remedies of the City under the contract or afforded by law for default of the Contractor.

6-5 CONTRACTOR'S RIGHT TO STOP WORK OR TERMINATE CONTRACT

If City fails to pay Contractor within 30 days after its due date any amounts covered by an application for payment, the payment of which is disputed by City, City or Contractor may, upon 7 Days written notice to the other, commence dispute resolution proceedings in accordance with the terms of the Contract Documents. In the event City disputes any payments due under the Contract Documents, Contractor shall not be entitled to suspend the Work or terminate the contract but must continue the performance of its services and the Work in accordance with the construction schedule therefor under the Contract Documents during the period during which the dispute is being resolved, provided Contractor is being promptly paid for all undisputed amounts.

If the dispute is resolved in Contractor's favor and City fails to pay Contractor the amount determined to be owed to Contractor pursuant to mediation, if applicable, within 30 days thereafter, Contractor shall be entitled to suspend the Work or terminate this contract as long as such failure continues and in accordance with the provisions contained herein.

The Contractor may give written notice to the Engineer and the City of intention to stop Work or terminate the contract, or both, unless payment is received within ten Days from receipt of such notice. If, after the expiration of said time the payment is not received, the Contractor may stop Work and may give written notice of termination of the contract to the City. The Contractor may also recover from the City payment for all Work executed and any loss sustained upon any equipment or materials procured for the Work prior to the Work stoppage, but such right to recovery shall be subject, however, to the duty of the Contractor to mitigate all loss or damage so far as reasonably possible.

6-6 TERMINATION OF CONTRACT

The Council may, at any time, terminate the contract for the City's convenience and without cause. The Council shall have the right to terminate this contract without cause at any time by giving to Contractor 72 hours written notice thereof. Upon receipt of such notice, Contractor immediately shall terminate performance of the Work and make reasonable efforts to mitigate its losses and damages hereunder; provided, however that in connection with such termination, Contractor shall perform such acts as may be necessary to preserve and protect that part of the Work theretofore performed hereunder.

Upon receipt of a notice of termination pursuant to this section, Contractor shall immediately, (according to instructions from City) proceed with performance of the following duties, regardless of delay in determining or adjusting amounts due under this section:

(1) cease operation as specified in the notice;

(2) place no further orders and enter into no further subcontracts for materials, labor, services or facilities except as otherwise specified in writing by City;

(3) terminate all subcontracts and purchase orders to the extent that City does not elect to assume such subcontracts and purchase orders; and

(4) take actions that may be necessary, or that City may direct in writing, for the protection and preservation of the Work.

In addition to payment for the Work performed prior to the effective date of termination and for any work performed following the date of termination pursuant to City's written request, Contractor shall be entitled to payment for materials timely fabricated off the Site and delivered and stored in accordance with the City's instructions.

Upon such termination without cause, Contractor shall retain all sums of money theretofore paid hereunder to Contractor and provided

(1) that no liens or claims have been filed of record with respect to Work performed hereunder or that all such liens and claims have been satisfied in the manner provided in the Contract Documents and provided further that Contractor has been paid by City for the Work which is the subject of the lien(s) or claim(s) if required to be paid therefore pursuant to the Contract Documents, and

(2) that Contractor delivers to City

(a) Contractor's unconditional waiver and release of claims with respect to the Work performed through the date of termination and paid for by City,

(b) Subcontractor and supplier unconditional waiver and release of claims for all subcontracts and supply agreements that have been fully performed on the date of termination, and

(c) an assignment to City or to the replacement contractor or City's designee of all subcontracts and purchase orders which City elects to assume by written notice to Contractor,

City shall pay to Contractor (i) all retainages, if any, theretofore retained hereunder by City in respect of the Work properly performed to the date of such termination (other than the retainage relating to portions of the Work performed by Subcontractors whose subcontracts City assumes, which retained amounts under such subcontracts will continue to be paid at the time and in the manner specified in the Contract Documents, (ii) payment for the Work properly executed in accordance with the Contract Documents prior to the effective date of termination (the basis for such payment shall be as provided in the Contract Documents), (iii) for the direct costs incurred by Contractor in terminating the Work, including out-of-pocket costs incurred by Contractor to third parties for cancelling subcontracts and purchase orders as a result of the termination of this contract authorized in accordance with the provision of this section, and (iv) reasonable demobilization costs, but City shall not otherwise be responsible for damages for lost or anticipated fees and/or profits on Work not performed on account of any termination described in this contract.

City shall not be obligated to reimburse Contractor for any central office overhead in connection with the termination. However, in no event shall the amounts to be paid to Contractor pursuant to the preceding paragraph, when combined with the amounts previously paid to Contractor and the costs thereafter required to be paid by City to complete the Work, exceed the Contract Price. The amounts owing by City to Contractor pursuant to the two immediately preceding sentences shall be as specified in Contractor's final application for payment approved by City.

If City terminates without cause, then City (or a replacement contractor or another designee of City), shall, with respect to all subcontracts and purchase orders which City does not elect to terminate (or cause Contractor to terminate) assume the obligations of Contractor under such subcontracts and purchase orders covering the unperformed parts of the Work and properly entered into in accordance with the contract.

Contractor shall also, upon request, deliver and assign to City or City's designee any and all subcontracts, purchase orders, options and other contracts made by Contractor in performance of the Work, and deliver to City true and correct originals and all copies of the Contract Documents, and of all other materials relating to the Work which belongs to City, together with all papers and documents relating to governmental permits, orders placed, bills and invoices, lien releases, waiver and release of claims, and financial management under the Contract Documents.

Notwithstanding any termination, Contractor shall take such steps as are reasonably necessary to preserve and protect the Work completed and in progress and to protect materials, supplies,

plant and equipment at the Site or in transit. No action taken by City shall prejudice any other rights or remedies of City provided by law or by the contract.

However, Contractor shall remain liable under the warranty provided in the Contract Documents with respect to all of the Work performed by Contractor prior to termination.

6-7 DELAYS AND EXTENSION OF TIME

By executing the contract, the Contractor confirms that the contract time (the period between the date thereof and the schedule date of substantial completion as set forth in the Contract Documents) is a reasonable period for performing the Work. The Contractor shall proceed expeditiously with adequate forces and shall achieve substantial completion of the Work within the contract time.

The Contractor covenants and agrees to use its best and diligent efforts to avoid the occurrence of any cause for delay and to avoid any extensions of performance dates except force majeure delays. Contractor shall notify the City and the Engineer of any cessation of the Work and total amount of delay, if any, in performance dates which Contractor claims by reason of any such occurrence. Immediately following the commencement of such cause for delay, representatives of the Contractor, City and Engineer shall confer for the purpose of endeavoring to determine a course of action which would terminate or eliminate the occurrence or event which is causing delay. Failure of Contractor to timely assert any alleged claim for extension shall constitute a waiver of the particular claim.

Notwithstanding anything to the contrary in the foregoing, the Contractor shall not be entitled to an extension of time unless the event or circumstances giving rise to a delay constitutes a Force Majeure Event and the activity delayed will result in a delay of the scheduled date for substantial completion of the project. "Force Majeure Event" means only: (i) strikes, lockouts or picketing (legal or illegal) which are not limited to the Site or projects which only the Contractor or any of its Subcontractors are involved with; (ii) governmental action (other than by City in its contracting capacity) and condemnation; (iii) riot, civil commotion, insurrection, and war; (iv) fire or other casualty, accident, acts of God or the enemy; (v) unusually adverse weather conditions to be reasonably expected for the location of the Project and the time of the year in question (substantiated as provided in this section below; (vi) unavailability of fuel, power, supplies or materials (and unavailability of any reasonable, if at the same price, practicable alternatives); (vii) the passage of, or the reasonably unexpected interpretation or application of, any statute, law, regulation or moratorium of any governmental authority; (viii) other causes beyond the reasonable control of Contractor (except to the extent in conflict with the above); or (ix) delays caused by the act or omission of the City or any separate contractor retained by City (if any), by delay authorized by the City, or resulting from changes in the Work (but only as set forth on the Change Orders therefor); provided, however, that neither the acts or omissions of Contractor, Subcontractors or suppliers, nor the Contractor's or any Subcontractor's insufficiency of funds, bankruptcy or insolvency, shall be deemed a Force Majeure Event.

If the Contractor wishes to make a claim for an increase in the contract time, written notice shall be given within 10 Days of Contractor’s discovery of the Force Majeure Event giving rise to such claim and at least 15 Days before the specified completion date. The Contractor's claim shall include an estimate of cost and of probable effect of delay on progress of the Work. In the case of a continuing delay, only one claim is necessary.

If adverse weather conditions are the basis for a claim for additional time, such claim shall be documented by data substantiating that weather conditions were abnormal for the period of time, could not have been reasonably anticipated and had an adverse effect on the scheduled construction, provided that the weather impact is beyond normal expectancy for the month in which the occurrence takes place based on historical weather data. The City shall own the float associated with weather delays.

Except for the Contractor's right to terminate this contract pursuant to the provisions of Section 6-5 above, the Contractor's sole remedy for any delay by the City or its agents or employees shall be an extension or extensions of time as set forth in this section, unless the same shall have been caused by acts or omissions of the City that interfere with the Contractor's performance of the Work. The City's exercise of any of its rights or remedies to suspend the Work or to require correction or re-execution of any defective Work, shall not under any circumstances be construed as acts interfering with the Contractor's performance of the Work.

With respect to City caused delay, Contractor shall be entitled to recover additional actual direct costs for any such delays, if such delays and costs result from the acts or omissions of the City or its consultants, separate contractors or representatives or changes in the Work provided that the delays impact the critical path of the project schedule. The increase in the Contract Price resulting from such delays shall be limited to the increase, if any, of actual direct costs incurred by the Contractor in performing the Work as a result of any such delays which cause the contract time to be increased. For purposes of this section, such direct costs are the reasonable increased costs of Contractor incurred for labor, materials, supplies and equipment, rental costs and machinery and equipment, subcontract costs, additional costs of supervision and field office personnel directly attributable to such increased costs, but excluding any profit or fee.

Any extensions of time, when granted, will be based upon the effect of delays to the project as a whole and will not be granted for non-controlling delays to included portions of the Work unless it can be shown that such delays did, or will in fact, delay the progress of the project as a whole.

The Engineer will ascertain the facts, the extent of the delays, and the effect upon the entire project, and the City will grant an extension of time equivalent to verified time lost. Extensions in the contract time shall be granted by City only to the extent that such delay: (1) affects the critical path of the Work, (2) has not been caused by Contractor, (3) is grounds for an extension in the contract time under the Contract Documents, and (4) is of a duration not less than one (1) day. Claims by Contractor for an extension of the contract time must be made in writing to City within 10 Days after Contractor discovers the event giving rise to such claim; otherwise, Contractor will be deemed to have waived its right to claim an extension in the contract time as a result of the occurrence of such event.

6-8 TIME OF COMPLETION

The Contractor shall complete the Work within the number of Days or working days set forth in the contract.

A working day is defined as any Day, except Saturdays, Sundays and legal holidays and Days on which the Contractor is specifically required by the Specifications to suspend construction operations and except Days on which the Contractor is prevented by inclement weather or

conditions resulting immediately therefrom adverse to the current controlling operation or operations, as determined by the Engineer, from proceeding with at least 75 percent of the normal labor and equipment force engaged on such operation or operations for at least 60 percent of the total daily time being currently spent on the controlling operation or operations.

Should the Contractor prepare to begin Work at the regular starting time in the morning of any Day on which inclement weather, or the conditions resulting from the weather, or the condition of the Work, prevents the Work from beginning at the usual starting time and the crew is dismissed as a result thereof and the Contractor does not proceed with at least 75 percent of the normal labor and equipment force engaged in the current controlling operation or operations for at least 60 percent of the total daily time being currently spent on the controlling operation or operations, the Contractor will not be charged for a working day whether or not conditions should change thereafter during said day and the major portion of the day could be considered to be suitable for such construction operations.

6-9 PROJECT CLOSE-OUT; COMPLETION AND ACCEPTANCE

When Contractor considers the Work ready for its intended use, the Contractor shall notify the City in writing that the Work is substantially complete. The Contractor shall attach to this request a list of all work items that remain to be completed and a request that the City prepare a Certificate of Substantial Completion. Within a reasonable time thereafter, the City and Contractor shall inspect the Work to determine the status of completion and to the extent that City agrees the Project is substantially complete. If the City does not consider the Work substantially complete, the City will notify Contractor in writing of the reasons therefore and Contractor shall promptly correct all items identified by the City. The City and Contractor shall repeat the above-referenced procedure until all items are completed to the City's satisfaction, whereupon City shall issue a Certificate of Substantial Completion.

On the date that the City issues the Certificate of Substantial Completion, the City shall provide Contractor with the final punch list identifying the remaining minor corrective items to be completed for final completion of the Project.

When the Contractor considers the final punch list work to be complete, it shall request City to perform a final walk through of the Project to determine if said punch list work is complete and whether Contractor has otherwise completed all of its obligations under the Contract Documents.

The City shall record the Notice of Final Acceptance when the entire Work including, but not limited to Contractor's closeout document obligations are fully satisfied, Contractor's punch list(s) and work shall have been completed to the satisfaction of the City.

However, the City, at its sole option, may accept completion of the Contract and have the Notice of Final Acceptance recorded when the entire Work including individual portions of the Work shall have been completed to the satisfaction of the City, except for minor corrective items, as distinguished from incomplete items.

Regardless of the cause therefore, the Contractor may not maintain any claim or cause of action against the City for damages incurred as a result of its failure or inability to complete its Work on the Project in a shorter period than established in the Contract Documents, the parties stipulating that the period set forth in the Contract Documents is a reasonable time within which to perform the work on the Project.

6-10 LIQUIDATED DAMAGES

Time of performance is of the essence of the Contract Documents and all obligations thereunder. The Contractor acknowledges and recognizes that the City is entitled to full and beneficial occupancy and use of the Project on the substantial completion date. If the Contractor is behind schedule to such an extent that the Contractor will be unable to meet such completion date set forth in the Bidding Requirements, as such date may be extended pursuant to the terms of this contract, the Contractor shall employ such additional forces, obtain such additional equipment, employ such additional supervision and pay such additional overtime wages as may be required to place the progress of the Work on schedule, as required for timely substantial completion. Substantial completion of the Project in accordance with the construction schedule shall not be achieved until issuance of a temporary certificate of occupancy or final certificate of occupancy, as applicable, by the applicable governmental agencies permitting occupancy of the Project.

City and the Contractor, by executing the contract, each agrees that damages to the City, and damages for the inconvenience and loss which will flow to the inhabitants of the City, from any delay (other than that caused by the failure of a Utility owner to remove or relocate a Utility facility) in completion beyond the date or dates provided in the contract for the substantial completion of the Work, or portions thereof, are extremely difficult or impossible to determine, and, accordingly, it is agreed that if the Contractor fails to achieve substantial completion of the Project in accordance with the construction schedule (also referred to herein as the "contract time" and shall reflect the completion date contained in the Bidding Requirements), subject to adjustments of the contract time as provided in the Contract Documents, the City shall be entitled to retain or recover from the Contractor, as liquidated damages and not as a penalty, the per diem amounts (contained in the Bidding Requirements) commencing upon the first Day following expiration of the contract time for Substantial Completion of the Project and continuing until the actual date of substantial completion of the Project.

Such liquidated damages are hereby agreed to be a manifestly reasonable amount of damages the City will incur as a result of delayed completion of the Work.

The Contractor shall not be assessed liquidated damages for delay in completion of the Work or project, when such delay is caused solely by the failure of a Utility owner to provide for the removal or relocation of existing Utility facilities when the existence of such Utility facilities substantially prevents or hinders completion of the project or Work.

The City shall initially process any liquidated damage claims through the Change Order process. If, however, City and Contractor have not agreed upon a deductive Change Order with respect to a liquidated damages claim within 15 Days following City's delivery of the proposed Change Order to Contractor, then City may deduct the liquidated damages from any unpaid amounts then or thereafter due the Contractor under this contract. Any liquidated damages not so deducted from any unpaid amounts due the Contractor shall be payable to the City at the demand of the City, together with interest from the date of the demand.

6-11 USE OF IMPROVEMENT DURING CONSTRUCTION

The City reserves the right to take over and utilize all or part of any completed facility or appurtenance. Such occupancy or use shall not constitute an acceptance of any part of the Work, unless so stated in writing by the City. However, such action by the City will relieve the Contractor of responsibility for injury or damage to said completed portions of the improvement

resulting from use by City, use by public traffic, from the action of the elements or from any other cause, except injury or damage resulting from the Contractor's operations or negligence. The Contractor will not be required to re-clean such portions of the improvement before acceptance, except for cleanup made necessary by his/her operations. Nothing in this section shall be construed as relieving the Contractor from full responsibility for correcting defective Work or materials.

SECTION 7 – RESPONSIBILITIES OF THE CONTRACTOR IN THE CONDUCT OF THE WORK

7-1 CONTRACTOR'S EQUIPMENT AND FACILITIES

The Contractor shall furnish and maintain in good condition all equipment and facilities as required for the proper execution and inspection of the Work. Such equipment and facilities shall meet all requirements of applicable ordinances, laws and regulations.

7-2 LABOR

7-2.1 General

Only competent workers shall be employed on the Work. Any Person employed or Subcontractor who is found to be incompetent, intemperate, troublesome, disorderly or otherwise objectionable, or who fails or refuses to perform his/her Work properly and acceptably, shall be immediately removed from the Work by the Contractor and not be reemployed on the Work. All labor shall be especially skilled for each kind of Work, thorough and first-class in all respects, and under the direction of a competent foreman, regardless of the kind and quality of material specified.

7-2.2 Laws

The Contractor, his/her agents and employees shall be bound by and comply with all applicable provisions of the California Labor Code and such other Federal, State and local laws which affect the conduct of the Work.

The Contractor shall strictly adhere to the provisions of the California Labor Code regarding minimum wages, alien labor, the 8-hour Day and 40-hour week, overtime, Saturday, Sunday, and holiday work, and non-discrimination of Persons outlined in the California Labor Code because of race, color, national origin, or religion. The Contractor shall forfeit to the City the penalties prescribed in the California Labor Code for violations.

7-2.2.1 California Labor Code Section 1775 Penalties for under Payment of Wages and Violation of Eight Hour Day; California Labor Code Section 1777.5 Employment of Apprentices

The Contractor and each Subcontractor shall comply with California Labor Code section 1775 and pay not less than the wages established by the Director of the Department of Industrial Relations and/or the Federal government. In accordance with such section 1775, Contractor or such subcontractor shall, as a penalty to the City, forfeit up to $200.00, as determined by the Labor Commissioner, for each calendar day or portion thereof for each worker under the contract paid less than the established wage rates. The Contractor shall contain in each subcontract the requirements hereunder.

Eight hours labor constitutes a regular day's work under the contract. Contractor or any Subcontractor under him/her shall forfeit as a penalty to the City $25.00 for each worker employed in the execution of the contract by Contractor or such Subcontractor for each calendar day during which any such

worker is required or permitted to labor more than eight hours in any one calendar day and 40 hours in any one calendar week in violation of sections 1810 to 1815, inclusive, of the California Labor Code. Notwithstanding the provisions of Sections 1810 to 1814, inclusive, of the California Labor Code, and notwithstanding the foregoing, work performed by employees of contractors and subcontractors in excess of 8 hours per day, and 40 hours during any one week, shall be permitted upon public work upon compensation for all hours in excess of 8 hours per day at not less than one and one-half (1.5) times the basic rate of pay.

In accordance with the California Labor Code, the City has on file a schedule of prevailing wage rates for the types of work to be done under the contract. The Contractor shall not pay less than these rates. Actual wage schedules are available at the Construction Management Office, 1721 Van Ness Avenue, Fresno, California 93721, (559) 621-5600.

Attention is directed to the provisions in Sections 1777.5 and 1777.6 of the California Labor Code concerning the employment of apprentices by the Contractor or any Subcontractor under him/her. The Contractor and any Subcontractor under him/her shall comply with the requirements of said Sections 1777.5 and 1777.6 in the employment of apprentices.

If the contract involves $30,000 or more, the Contractor and each Subcontractor shall comply with California Labor Code section 1777.5, as it may be amended from time to time, the entire provisions of which are incorporated by this reference as if fully set forth herein, and Article 10, Subchapter 1, Chapter 2, Title 8 of the California Code of Regulations for all apprenticeable occupations applicable to the work as defined in such laws and regulations. Contractor shall be responsible for the compliance with such Labor Code section for all apprenticeable occupations and shall contain in each subcontract the requirements hereunder. In accordance with section 1777.5 of the California Labor Code and the rules and regulations of the California Apprenticeship Council, properly indentured apprentices shall be employed in the execution of the contract in at least the ratio of not less than 1 hour of apprentice work for every 5 hours of journeyman work (unless the respective contractor or subcontractor has been exempted from such ratio) and paid the prevailing rate of per diem wages for apprentices in the trade to which he/she is registered. The employment and training of each apprentice shall be in accordance with either the apprenticeship standards and apprentice agreements under which he/she is training, or the rules and regulations of the California Apprenticeship Council. Prior to commencing work on the contract, Contractor and each Subcontractor shall submit contract award information to the City, if requested, and to an applicable apprenticeship program that can supply apprentices to the job site. The information shall include an estimate of journeyman hours to be performed under the contract, the number of apprentices proposed to be employed, and the approximate dates the apprentices would be employed. Within 60 days after concluding work on the contract, the Contractor and each Subcontractor shall submit to the City, if requested, and to the apprenticeship program a verified statement of the journeyman and apprentice hours performed on the contract. Contractor shall employ apprentices for the number of hours computed before the end of the contract or, in the case of the Subcontractor, before the end of the

subcontract and endeavor, to the greatest extent possible, to employ apprentices during the same time period that the journeymen in the same craft or trade are employed at the job site.

If the contract involves $500,000 or more, the Contractor shall contain in each subcontract the requirements hereunder and be responsible for providing all documentation required hereunder from Subcontractor to the City. The Contractor and each Subcontractor shall provide documentation to City demonstrating compliance with the requirements of California Labor Code section 1777.5 and Article 10, Subchapter 1, Chapter 2, Title 8 of the California Code of Regulations by providing City copies of each of the following:

(i) All contract award information (e.g., completed form DAS 140) sent by Contractor and by Subcontractors to the State Division of Apprenticeship Standards and each applicable apprenticeship program in accordance with California Labor Code section 1777.5, as may be amended from time to time, including identification of addressee.

(ii) All requests by Contractor and by Subcontractors for approval, and all responses and certificates from any applicable apprenticeship program disapproving or approving Contractor or Subcontractor(s), to train apprentices; if any.

(iii) All requests by Contractor and by Subcontractors for dispatch of apprentices from any applicable apprenticeship program (e.g., completed form DAS 142); and all responses thereto, if any.

(iv) All certifications, if any, of Contractor and of Subcontractor(s) as an individual employer apprenticeship program by the State Division of Apprenticeship Standards or the California Apprenticeship Council.

(v) All apprenticeship agreements of apprentices employed by Contractor and by Subcontractor(s) and performing work under the contract.

(vi) A verified statement by the Contractor and by the subcontractor within 60 days after concluding the work of the respective journeyperson and apprentice hours performed on the Contract or subcontract.

(vii) All certificates of any exemption by the State Division of Apprenticeship Standards, California Apprenticeship Council or any apprenticeship program of Contractor or Subcontractor from any requirements of California Labor Code section 1777.5, as may be amended from time to time.

(viii) Other documentation as may be requested by City.

Information relative to apprenticeship standards, wage schedules, and other requirements may be obtained from the Director of Industrial Relations, ex-officio the Administrator of Apprenticeship, San Francisco, California, or from the Division of Apprenticeship Standards and its branch offices.

The branch office in this area is located at 2550 Mariposa St., Fresno, California 93721, Telephone (559) 445- 5431 268-7151, Ext. 315.

7-2.2.2 California Labor Code Section 6705 Trench Excavation

If the contract involves an estimated expenditure in excess of $25,000.00 and excavation of any trench or trenches five feet or more in depth, then your attention is directed to California Labor Code section 6705 relating to a detailed plan showing the design of shoring, bracing, sloping, or other provisions to be made for worker protection from the hazard of caving ground during the excavation of such trench or trenches, the entire provisions of which are incorporated by this reference as if fully set forth hereinafter.

Before execution of the contract by the City, the Contractor shall submit to the City and the Engineer shall accept, if satisfactory to him/her, said detailed plan.

If, in the Engineer's opinion, there is any noncompliance with said detailed plan, then the Contractor shall stop forthwith all trench work until, either in the Engineer's or the State Division of Industrial Safety's opinion, there is compliance. The City shall not be liable for costs incurred by the Contractor due to the work stoppage and the Contractor will not be given nor is entitled to an extension of time to complete the work within the time set forth in the contract due to the work stoppage.

7-2.2.3 Economic Stabilization Act of 1970

Notwithstanding any provisions of the contract to the contrary, the Contractor shall be bound by the orders issued and rules and regulations adopted pursuant to the Economic Stabilization Act of 1970 (Public Law 91-379, 84 Statutes 799), as amended, or any subsequent Act of Congress.

7-2.2.4 Occupational Safety and Health Act of 1970

The contract is subject to all terms and conditions of the Occupational Safety and Health Act of 1970, the California Occupational Safety and Health Act and their present and future amendments.

Contractor expressly assumes responsibility for compliance therewith and warrants that all materials, supplies and equipment provided or installed pursuant to the contract, whether provided by the Contractor, Subcontractor, or a supplier, fully satisfy the requirements of said Acts. Contractor shall, upon insertion in each Contract with a Subcontractor or supplier of a clause by which the Subcontractor or supplier warrants such compliance, be relieved of responsibility by the Subcontractor or supplier.

7-2.2.5 California Labor Code Section 1776 Payrolls and Basic Records

The Contractor and each Subcontractor shall comply with California Labor Code section 1776, the entire provisions of which are incorporated by this reference

as if fully set forth herein, and Contractor shall contain in each subcontract the requirements hereunder.

7-2.2.5.1 Accurate payroll records and basic records relating thereto shall be maintained by the Contractor and each Subcontractor during the course of the work and preserved for a period as required by law for all journeymen, apprentices, workers, and other employees employed in connection with the work. Such records shall contain information as on the payroll record forms provided by the Division of Labor Standards of the Department of Industrial Relations, the name, address, social security number, work classification, hourly rates of wages paid (including rates of contributions or costs anticipated for bona fide fringe benefits or cash equivalents), daily and weekly number of hours worked, deductions made and actual per diem wages paid. The Contractor shall maintain records which show that the commitment to provide such benefits is enforceable, that the plan or program is financially responsible, and that the plan or program has been communicated in writing to all employees affected, and records which show the costs anticipated or the actual cost incurred in providing such benefits.

Contractors employing apprentices or trainees under approved programs shall maintain written evidence of the registration of apprenticeship programs and certification of trainee programs, the registration of the apprentices and trainees, and the ratios and wage rates prescribed in the applicable programs.

7-2.2.5.2 (1) The Contractor shall submit weekly (7 days after each week ending pay period) for each week in which any Contract work is performed a certified copy of all payrolls to the Engineer. The payrolls submitted shall set out accurately and completely all of the information required to be maintained under paragraph 7-2.2.5.1 of this section entitled “California Labor Code Section 1776 Payrolls and Basic Records.” The Contractor is responsible for the submission of certified copies of payrolls by all Subcontractors.

(2) Each payroll submitted shall be accompanied by a "Statement of Compliance," signed by the Contractor or Subcontractor or his or her agent who pays or supervises the payment of the persons employed under the contract and shall certify under penalty of perjury under the laws of the State of California each of the following:

(i) That the payroll for the payroll period contains the information required to be maintained under paragraph 7-2.2.5.1 of this section entitled “California Labor Code Section 1776 Payrolls and Basic Records" and that such information is true, correct and complete;

(ii) That each employee employed on the contract during the payroll period has been paid the full weekly wages

earned, without rebate, either directly or indirectly, and that no deductions have been made either directly or indirectly from the full wages earned, other than permissible deductions;

(iii) That each employee has been paid not less than the applicable wage rates and fringe benefits or cash equivalents for the classification of work performed, as specified in the applicable wage determination incorporated into the contract;

(iv) Contractor has complied with the requirements of California Labor Code sections 1771, 1811, and 1815 for any work performed hereunder by his/her employees.

(3) The weekly submission of a properly executed certification set forth on the reverse side of Optional Form WH-347 shall satisfy the requirement for submission of the "Statement of Compliance" required by paragraph (2) of this paragraph 7-2.2.5.2.

(4) The falsification of any of the above certifications may subject the Contractor or Subcontractor to civil or criminal prosecution.

7-2.2.5.3 The Contractor or Subcontractor shall make certified copies of all the records required under paragraph 7-2.2.5.2 of this section 7-2.2.5 available for inspection at all reasonable hours at the principal office of the Contractor by, and furnished upon request to, the Engineer, the Division of Labor Standards Enforcement of the Department of Industrial Relations, the Division of Apprenticeship Standards of the Department of Industrial Relations, and each of their authorized representatives. A certified copy of the employee's record shall likewise be made available for inspection or furnished upon request by the employee or his/her authorized representative. The Contractor shall provide hereunder the street address, city and county of the location of the payroll records maintained by Contractor and shall provide a notice of any change of location and address within 5 working days of such change. The Contractor and Subcontractors shall permit such representatives to interview employees during working hours on the job. If the Contractor or Subcontractor fails to submit the required records within 10 days after each week ending pay period, or to furnish or make them available for inspection within 10 days of request, (Contractor has 10 days to comply) after written notice, the Contractor shall forfeit $100.00 for each calendar day, or portion thereof, for each worker, until strict compliance is effectuated, pursuant to California Labor Code section 1776.

7-2.2.6 Fair Employment Practices and Nondiscrimination

In connection with the performance of work under the contract, the Contractor agrees as follows:

(1) The Contractor shall not unlawfully discriminate, harass, or allow harassment against any employee or applicant for employment because of race, religious creed, color, national origin, ancestry, physical disability (including HIV and AIDS), mental disability, medical condition (cancer), marital status, political affiliation, sex, age (over 40), sexual orientation, and denial of family care leave or on any other basis prohibited by law. The Contractor shall ensure that the treatment of employees and evaluation of applicants for employment are free of such discrimination and harassment. Such action shall include, but not be limited to, the following: employment, upgrading, demotion or transfer, recruitment or recruitment advertising; layoff or termination; rates of pay or other forms of compensation; and selection for training, including apprenticeship. The Contractor agrees to post in conspicuous places, available to employees and applicants for employment, notices to be provided by the State of California setting forth the provisions of this Fair Employment Practices section.

(2) Contractor and all Subcontractors shall comply with the provisions of the Fair Employment and Housing Act (Government Code, Section 12900 et seq.), and the applicable regulations promulgated thereunder (California Code of Regulations, Title 2, Section 7285.0 et seq.). The applicable regulations of the Fair Employment and Housing Commission implementing Government Code Section 12990 (a-f), set forth in Chapter 5 of Division 4 of Title 2 of the California Code of Regulations, are incorporated into this Agreement by reference and made a part hereof as if set forth in full.

(3) Contractor assures City that it shall comply with the requirements of the Americans with Disabilities Act (ADA) of 1990, (42 U.S.C. 12101 et seq.), which prohibits discrimination on the basis of disability, as well as all applicable regulations and guidelines issued pursuant to the ADA; the Civil Rights Act of 1964, as amended, 42 U.S.C. 2000d (1988) et seq.; Section 504 of the Rehabilitation Act of 1973, as amended, 29 U.S.C. 794 (1989) and the Age Discrimination Act of 1975, as amended, 42 U.S.C. 6102 (1994); together with all applicable regulations and guidelines adopted to implement same. Said group of laws and requirements are collectively referred to in the contract as the “anti-discrimination laws”.

(4) The Contractor will send to each labor union or representative of workers with which he/she has a collective bargaining agreement or other contract or understanding, a written notice advising the said labor union or workers' representative of the Contractor's commitments under this section, and shall post copies of the notice in conspicuous places available to employees and applicants for employment.

(5) The Contractor will permit access to his/her records of employment, employment advertisements, application forms, and other pertinent data and records by the City, State of California, the State Fair Employment and Housing Commission, or any other appropriate agency designated

by the City or the State of California, for the purposes of investigation to ascertain compliance with the Fair Employment Practices and Nondiscrimination section of the contract.

(6) Contractor agrees to collect and maintain information to show compliance with the “anti-discrimination laws” including a list of discrimination complaints, reports of any compliance reviews conducted by other agencies descriptions of any pending discrimination-based lawsuits and data on the racial, ethnic, national origin, sex and handicap characteristics of the population it serves.

(7) Contractor agrees to cooperate with City, and any other appropriate agency designated by the City, in all manner necessary to permit City and any such agency to adequately report to the United States Environmental Protection Agency on Contractor’s compliance with the “anti-discrimination laws”.

(8) A finding of willful violation of the Fair Employment Practices section of the contract or of the California Fair Employment and Housing Act shall be regarded by the City as a basis for determining the Contractor to be not a "responsible Bidder" as to future contracts for which such Contractor may submit bids, for revoking the Contractor's prequalification rating, if any, and for refusing to establish, reestablish, or renew a prequalification rating for the Contractor.

The City will deem a finding of willful violation of the California Fair Employment and Housing Act to have occurred upon receipt of written notice from the Fair Employment and Housing Commission that it has investigated and determined that the Contractor has violated the California Fair Employment and Housing Act and has issued an order under California Government Code section 12973, section 12970, or obtained an injunction under California Government Code section 12973.

Upon receipt of such written notice from the Fair Employment and Housing Commission, the City shall notify the Contractor that unless he/she demonstrated to the satisfaction of the City within a stated period that the violation has been corrected, that he/she will be reported to the City Council as not a "responsible Bidder" on any future Contract.

(9) The Contractor agrees, that should the City determine that the Contractor has not complied with the Fair Employment Practices section of the contract, then pursuant to Labor Code sections 1735 and 1775, the Contractor shall forfeit, as a penalty to the City, for each calendar day, or portion thereof, for each person who was denied employment as a result of such noncompliance, the penalties provided in the Labor Code for violation of prevailing wage rates. Such monies may be recovered from the Contractor. The City may deduct any such damages from any monies due the Contractor from the City. Furthermore, Contractor agrees that the City shall have the right to terminate the contract either in whole or in part, and any loss or damage sustained by City in securing the goods or services thereunder shall be borne and

paid for by Contractor and by the surety under the performance bond, if any, and City may deduct from any moneys due or thereafter may become due to Contractor, the difference between the price named in the contract and the actual cost thereof to City to cure Contractor's breach of the contract.

(10) Nothing contained in this Fair Employment Practices section shall be construed in any manner or fashion so as to prevent the City from pursuing any other remedies that may be available at law.

(11) The Contractor shall certify to the City that he/she has or will meet the following standards for affirmative compliance, which shall be evaluated in each case by the City:

(i) The Contractor shall provide evidence, as required by the City, that he/she has notified all supervisors, foremen, and other personnel officers in writing of the content of the antidiscrimination clause and their responsibilities under it.

(ii) The Contractor shall provide evidence, as required by the City, that he/she has notified all sources of employee referrals (including unions, employment agencies, advertisement, Department of Employment) of the content of the antidiscrimination clause.

(iii) The Contractor shall file a Fair Employment Practices compliance report, as required by the City. Willfully false statements made in such reports shall be punishable as provided by law. The compliance report shall also spell out the sources of the work force and who has the responsibility for determining whom to hire, or whether or not to hire. The compliance report shall be kept current throughout the contract in that the Contractor shall report any changes in or additions to the answers therein, including changes in agreements with others. After the work or supplying materials is complete, and before final payment, the Contractor shall submit a final statement of compliance.

(iv) Personally, or through his/her representatives, the Contractor shall, through negotiations with the unions with whom he/she has agreements, attempt to develop an agreement which will:

(a) Spell out responsibilities for nondiscrimination in hiring, referral, upgrading and training.

(b) Otherwise implement an affirmative antidiscrimination program in terms of the unions; specific areas of skill and geography, to the end that qualified disadvantaged workers will be available and given an equal opportunity for employment.

(12) Contractor's signature on the contract shall constitute a certification under the penalty of perjury under the laws of the State of California that Contractor has, unless exempted, complied with the nondiscrimination program requirements of Government Code, Section 12990, and Title 2, California Code of Regulations, Section 8103.

(13) The Contractor will include the provisions of the foregoing paragraphs (1) through (12) in every first tier subcontract so that such provisions will be binding upon each such Subcontractor.

7-3 INSURANCE REQUIREMENTS

All contractors shall be required to maintain insurance as noted below:

INSURANCE REQUIREMENTS

(a) Throughout the life of this Agreement, CONTRACTOR shall pay for and maintain in full force and effect all insurance as required herein with an insurance company(ies) either (i) admitted by the California Insurance Commissioner to do business in the State of California and rated no less than "A-VII" in the Best's Insurance Rating Guide, or (ii) as may be authorized in writing by CITY'S Risk Manager or his/her designee at any time and in his/her sole discretion. The required policies of insurance as stated herein shall maintain limits of liability of not less than those amounts stated therein. However, the insurance limits available to CITY, its officers, officials, employees, agents and volunteers as additional insureds, shall be the greater of the minimum limits specified therein or the full limit of any insurance proceeds to the named insured.

(b) If at any time during the life of the Agreement or any extension, CONTRACTOR or any of its subcontractors fail to maintain any required insurance in full force and effect, all services and work under this Agreement shall be discontinued immediately, and all payments due or that become due to CONTRACTOR shall be withheld until notice is received by CITY that the required insurance has been restored to full force and effect and that the premiums therefore have been paid for a period satisfactory to CITY. Any failure to maintain the required insurance shall be sufficient cause for CITY to terminate this Agreement. No action taken by CITY pursuant to this section shall in any way relieve CONTRACTOR of its responsibilities under this Agreement. The phrase "fail to maintain any required insurance" shall include, without limitation, notification received by CITY that an insurer has commenced proceedings, or has had proceedings commenced against it, indicating that the insurer is insolvent.

(c) The fact that insurance is obtained by CONTRACTOR shall not be deemed to release or diminish the liability of CONTRACTOR, including, without limitation, liability under the indemnity provisions of this Agreement. The duty to indemnify CITY shall apply to all claims and liability regardless of whether any insurance policies are applicable. The policy limits do not act as a limitation upon the amount of indemnification to be provided by CONTRACTOR. Approval or purchase of any insurance contracts or policies shall in no way relieve from liability nor limit the liability of CONTRACTOR, vendors, suppliers, invitees, contractors, sub-contractors, subcontractors, or anyone employed directly or indirectly by any of them.

Coverage shall be at least as broad as:

1. The most current version of Insurance Services Office (ISO) Commercial General Liability Coverage Form CG 00 01, providing liability coverage arising out of your business operations. The Commercial General Liability policy shall be written on an occurrence form and shall provide coverage for "bodily injury," "property damage" and

"personal and advertising injury" with coverage for premises and operations (including the use of owned and non-owned equipment), products and completed operations, and contractual liability (including, without limitation, indemnity obligations under the Agreement) with limits of liability not less than those set forth under "Minimum Limits of Insurance."

2. The most current version of ISO *Commercial Auto Coverage Form CA 00 01, providing liability coverage arising out of the ownership, maintenance or use of automobiles in the course of your business operations. The Automobile Policy shall be written on an occurrence form and shall provide coverage for all owned, hired, and non-owned automobiles or other licensed vehicles (Code 1- Any Auto). If personal automobile coverage is used, the CITY, its officers, officials, employees, agents and volunteers are to be listed as additional insureds.

3. Workers' Compensation insurance as required by the State of California and Employer's Liability Insurance.

MINIMUM LIMITS OF INSURANCE

CONTRACTOR, or any party the CONTRACTOR subcontracts with, shall maintain limits of liability of not less than those set forth below. However, insurance limits available to CITY, its officers, officials, employees, agents and volunteers as additional insureds, shall be the greater of the minimum limits specified herein or the full limit of any insurance proceeds available to the named insured:

1. **COMMERCIAL GENERAL LIABILITY (CGL)**:

   (i) $2,000,000 per occurrence for bodily injury and property damage;
   (ii) $2,000,000 per occurrence for personal and advertising injury;
   (iii) $4,000,000 aggregate for products and completed operations; and,
   (iv) $4,000,000 general aggregate applying separately to the work performed under the Agreement.

2. **COMMERCIAL AUTOMOBILE LIABILITY (CAL)**:

   $1,000,000 per accident for bodily injury and property damage.

   **OR (as approved by the City's Risk Manager)*

   PERSONAL AUTOMOBILE LIABILITY insurance with limits of liability not less than:

   (i) $100,000 per person;
   (ii) $300,000 per accident for bodily injury; and,
   (iii) $50,000 per accident for property damage.

3. **WORKERS' COMPENSATION INSURANCE** as required by the State of California with statutory limits and **EMPLOYER'S LIABILITY** with limits of liability not less than:

(i) $1,000,000 each accident for bodily injury;
(ii) $1,000,000 disease each employee; and,
(iii) $1,000,000 disease policy limit.

4. **BUILDERS RISK** (Course of Construction) insurance in an amount equal to the completed value of the project with no coinsurance penalty provisions. **(Only required if the project includes new construction of a building, or renovation of, or addition to, an existing building.)**

5. **CONTRACTORS' POLLUTION LEGAL LIABILITY** (CPL) (and/or other applicable policies as determined by the City's Risk Manager or his/her designee, e.g. Asbestos Legal Liability) *unless waived in writing by the CITY'S Risk Manager or his/her designee* shall be written on either an occurrence form, or a claims-made form, and is required for all environmental and water remediation work and for all work transporting fuel. CPL is also required for demolition, renovation, HVAC, plumbing and electrical work (including, without limitation, lighting) on any structure built prior to the year 1990 with limits of liability of not less than the following:

(i) $1,000,000 per occurrence or claim; and,
(ii) $2,000,000 general aggregate per annual policy period.

(a) In the event this Agreement involves any lead based, mold or asbestos environmental hazard, either the CAL policy or other appropriate insurance policy shall be endorsed to include *Transportation Pollution Liability insurance* covering materials to be transported by APPLICANT pursuant to the Agreement.

(b) In the event this Agreement involves any lead-based environmental hazard (e.g., lead based paint), and/or asbestos environmental hazard (e.g. asbestos remediation), and/or mold environmental hazard (e.g. mold remediation) the CPL insurance policy or other appropriate policy shall be endorsed to include coverage for lead based environmental hazards and/or asbestos environmental hazards and/or mold environmental hazards and "microbial matter including mold" with the definition of "Pollution" und

UMBRELLA OR EXCESS INSURANCE

In the event CONTRACTOR purchases an Umbrella or Excess insurance policy(ies) to meet the "Minimum Limits of Insurance," this insurance policy(ies) shall "follow form" and afford no less coverage than the primary insurance policy(ies). In addition, such Umbrella or Excess insurance policy(ies) shall also apply on a primary and non-contributory basis for the benefit of the CITY, its officers, officials, employees, agents and volunteers.

DEDUCTIBLES AND SELF-INSURED RETENTIONS

CONTRACTOR shall be responsible for payment of any deductibles contained in any insurance policy(ies) required herein and CONTRACTOR shall also be responsible for payment of any self-insured retentions. Any deductibles or self-insured retentions must be declared on the Certificate of Insurance, and approved by, the CITY'S Risk Manager or his/her designee. At the option of the CITY'S Risk Manager or his/her designee, either:

(i) The insurer shall reduce or eliminate such deductibles or self-insured retentions as respects CITY, its officers, officials, employees, agents and volunteers; or

(ii) CONTRACTOR shall provide a financial guarantee, satisfactory to CITY'S Risk Manager or his/her designee, guaranteeing payment of losses and related investigations, claim administration and defense expenses. At no time shall CITY be responsible for the payment of any deductibles or self-insured retentions.

OTHER INSURANCE PROVISIONS/ENDORSEMENTS

(i) *All policies of insurance* required herein shall be endorsed to provide that the coverage shall not be cancelled, non-renewed, reduced in coverage or in limits except after thirty (30) calendar days written notice has been given to CITY, except ten (10) days for nonpayment of premium. CONTRACTOR is also responsible for providing written notice to the CITY under the same terms and conditions. Upon issuance by the insurer, broker, or agent of a notice of cancellation, non-renewal, or reduction in coverage or in limits, CONTRACTOR shall furnish CITY with a new certificate and applicable endorsements for such policy(ies). In the event any policy is due to expire during the work to be performed for CITY, CONTRACTOR shall provide a new certificate, and applicable endorsements, evidencing renewal of such policy not less than fifteen (15) calendar days prior to the expiration date of the expiring policy.

(ii) The CGL, CAL and CPL policies of insurance shall be endorsed to name CITY, its officers, officials, agents, employees and volunteers as additional insureds. CONTRACTOR shall establish additional insured status for the City and for all ongoing and completed operations by use of ISO Form CG 20 10 11 85 or both CG 20 10 10 01 and CG 20 37 10 01 or by an executed manuscript insurance company endorsement providing additional insured status as broad as that contained in ISO Form CG 20 10 11 85.

(iii) For any claims related to this Agreement, CONTRACTOR'S insurance coverage shall be primary insurance with respect to the CITY, its officers, officials, agents, employees and volunteers. Any insurance or self-insurance maintained by the CITY, its officers, officials, agents, employees and volunteers shall be excess of the CONTRACTOR'S insurance and shall not contribute with it. CONTRACTOR and any subcontractor shall establish primary and noncontributory status by use of ISO Form CG 20 01 04 13 or by an executed manuscript insurance company endorsement that provides primary and noncontributory status as broad as that contained in ISO Form CG 20 01 04 13.

(iv) The coverage shall contain no special limitations on the scope of protection afforded to CITY, its officers, officials, employees, agents and volunteers. Any available insurance proceeds in excess of the specified minimum limits and coverage shall be available to the Additional Insured.

(v) The Workers' Compensation insurance policy shall contain, or be endorsed to contain, a waiver of subrogation as to CITY, its officers, officials, agents, employees and volunteers.

PROVIDING OF DOCUMENTS - CONTRACTOR shall furnish CITY with all certificate(s) and applicable endorsements effecting coverage required herein **All certificates and applicable endorsements are to be received and approved by the CITY'S Risk Manager or his/her designee prior to CITY'S execution of the Agreement and before work commences.** All non-ISO endorsements amending policy coverage shall be executed by a licensed and authorized agent or broker. Upon request of CITY, CONTRACTOR shall immediately furnish CITY with a complete copy of any insurance policy required under this Agreement, including all endorsements, with said copy certified by the underwriter to be a true and correct copy of the original policy. This requirement shall survive expiration or termination of this Agreement. All subcontractors working under the direction of CONTRACTOR shall also be required to provide all documents noted herein.

CLAIMS-MADE POLICIES - If any coverage required is written on a claims-made coverage form:

(i) The retroactive date must be shown, and must be before the effective date of the Agreement or the commencement of work by CONTRACTOR.

(ii) Insurance must be maintained and evidence of insurance must be provided for at least five (5) years after completion of the work or termination of the Agreement, whichever first occurs.

(iii) If coverage is canceled or non-renewed, and not replaced with another claims-made policy form with a retroactive date prior to the effective date of the Agreement, or work commencement date, CONTRACTOR must purchase "extended reporting" period coverage for a minimum of five (5) years after completion of the work or termination of the Agreement, whichever first occurs.

(iv) A copy of the claims reporting requirements must be submitted to CITY for review.

(v) These requirements shall survive expiration or termination of the Agreement.

MAINTENANCE OF COVERAGE - If at any time during the life of the Agreement or any extension, CONTRACTOR or any of its subcontractors fail to maintain any required insurance in full force and effect, all work under this Agreement shall be discontinued immediately until notice is received by CITY that the required insurance has been restored to full force and effect and that the premiums therefore have been paid for a period satisfactory to CITY. Any failure to maintain the required insurance shall be sufficient cause for CITY to terminate this Agreement. No action taken by CITY hereunder shall in any way relieve CONTRACTOR of its responsibilities under this Agreement. The phrase "fail to maintain any required insurance" shall

include, without limitation, notification received by CITY that an insurer has commenced proceedings, or has had proceedings commenced against it, indicating that the insurer is insolvent.

The fact that insurance is obtained by CONTRACTOR shall not be deemed to release or diminish the liability of CONTRACTOR, including, without limitation, liability under the indemnity provisions of this Agreement. The duty to indemnify CITY shall apply to all claims and liability regardless of whether any insurance policies are applicable. The policy limits do not act as a limitation upon the amount of indemnification to be provided by CONTRACTOR. Approval or purchase of any insurance contracts or policies shall in no way relieve from liability nor limit the liability of CONTRACTOR, its principals, officers, agents, employees, persons under the supervision of CONTRACTOR, vendors, suppliers, invitees, consultants, sub-consultants, subcontractors, or anyone employed directly or indirectly by any of them.

SUBCONTRACTORS - If CONTRACTOR should subcontract all or any portion of the services to be performed under this Agreement, CONTRACTOR shall require and verify that all subcontractors maintain insurance meeting all the requirements stated herein and CONTRACTOR shall ensure that CITY, its officers, officials, employees, agents and volunteers are additional insureds. The subcontractors' certificates and endorsements shall be on file with CONTRACTOR and CITY prior to the commencement of any work by the subcontractor.

7-4 INDEMNIFICATION

To the furthest extent allowed by law including California Civil Code Section 2782, Contractor shall indemnify, hold harmless and defend City and each of its officers, officials, employees, agents and volunteers from any and all loss, liability, fines, penalties, forfeitures, costs and damages (whether in contract, tort or strict liability, including, but not limited to personal injury, death at any time and property damage) incurred by City, Contractor or any other Person, and from any and all claims, demands and actions in law or equity (including attorney's fees and litigation expenses), arising or alleged to have arisen directly or indirectly out of performance of this contract. Contractor's obligations under the preceding sentence shall apply regardless of whether City or any of its officers, officials, employees, agents or volunteers are passively negligent, but shall not apply to any loss, liability, fines, penalties, forfeitures, costs or damages caused by the active or sole negligence, or willful misconduct, of City or any of its officers, officials, employees, agents or volunteers.

If Contractor should subcontract all or any portion of the Work to be performed under this contract, Contractor shall require each Subcontractor to indemnify, hold harmless and defend City and each of its officers, officials, employees, agents, and volunteers in accordance with the term of the preceding paragraph.

This section shall survive termination or expiration of this contract.

7-5 PERMITS AND FEES

Unless otherwise provided by the Special Conditions, the Contractor will pay building, plumbing, electrical, demolition and similar permit fees and plan checking fees. Contractor will obtain and pay for all permits and licenses required for him/her to do business within the City. Contractor will be responsible for Sewer or water main extension charges, front footage charges, or Street Work permit fees or charges. If required, a water meter permit and fee shall

be obtained and paid for by Contractor at the Fresno City Water Division Office at 1910 East University Avenue.

Encroachment permits that require the submittal of a traffic control plan will not be approved until said traffic control plan has been submitted to and approved by City of Fresno Traffic Engineering Division.

State Department of Transportation encroachment permits are required for Work at or near a State highway.

A Contractor using vehicles necessary for the performance of the Work, that require parking off-Site in an area subject to a parking violation, shall obtain a special parking permit issued by the Traffic Engineer. A Contractor not possessing such a valid parking permit shall be required to otherwise comply with the parking requirements of Chapter 14 of the City of Fresno Municipal Code, and will be subject to fines for violation of the Code.

7-6 THE CONTRACTOR'S REPRESENTATIVE

Before starting the Work, the Contractor shall designate, in writing, a representative who shall have complete authority to act for him/her. An alternate representative may be designated. The representative or alternate shall be present at the Site whenever Work is in progress. Any order or communication given to this representative shall be deemed delivered to the Contractor. A joint venture shall designate only one representative and alternate. In the absence of the Contractor or his/her designated representative, necessary or desirable directions or instructions may be given by the Engineer to the superintendent or foreman having charge of the specific Work to which the order applies. Such order shall be complied with promptly and referred to the Contractor or his/her representative.

7-7 COOPERATION AND COLLATERAL WORK

The Contractor shall coordinate his/her work at the Site with work which may be done concurrently by other contractors as required by Section 5-1.20 of the State Standard Specifications.

Should construction be under way by other forces or by other contractors within or adjacent to the limits of the Work specified or should work of any other nature be under way by other forces within or adjacent to those limits, the Contractor shall cooperate with all the other contractors or other forces to the end that any delay or hindrance to their work will be avoided. The right is reserved to perform other or additional work at or near the site (including material sources) at any time, by the use of other forces.

When two or more contractors are employed on related or adjacent work, or obtain materials from the same material source, each shall conduct their operations in such a manner as not to cause any unnecessary delay or hindrance to the other.

Each contractor shall be responsible to the other for all damage to work, to persons or property caused to the other by their operations, and for loss caused the other due to unnecessary delays or failure to finish the work within the time specified for completion.

The Contractor shall be responsible for ascertaining the nature and extent of any simultaneous, collateral and essential work by others. The City, its workers and contractors, and others, shall have the right to operate within or adjacent to the Site to perform such work.

The City reserves the right to award other contracts in connection with the total project, the work under which may proceed simultaneously with the Work to be done under this Contract. The Contractor shall coordinate his/her operations with those of other contractors. Cooperation will be required in the arrangement for the storage of materials, and in the detailed execution of the Work. The Contractor, including his/her Subcontractors, if any, shall keep himself/herself informed of the progress and the detail work of other contractors and shall notify the Engineer immediately of lack of progress or defective workmanship on the part of other contractors, where such delay or such defective workmanship will interfere with the Contractor's or Subcontractor's operations. Failure of the Contractor to keep informed of the Work progressing on the Site and failure to give notice of lack of progress or defective workmanship by others shall be construed as acceptance by him/her of the status of the work as being satisfactory for proper coordination with his/her own Work. The Contractor shall adjust, correct and coordinate his/her Work with the work of others, so that no discrepancies shall result in the whole work.

The City, the Contractor, and each of such workers, contractors, and others, shall coordinate their operations and cooperate to minimize interference.

The Contractor shall absorb in his/her bid all costs involved in his/her part as a result of coordinating his/her work with others. The Contractor will not be entitled to additional compensation from the City for damages resulting from such simultaneous, collateral and essential work. If necessary to avoid or minimize such damage, or delay, the Contractor shall redeploy his/her work force to other parts of the Work.

Where the work of one trade joins, or is on, other work, there shall be no discrepancy or defect when both such work is completed. In engaging one kind of work with another, marring or damaging the other work will not be permitted. Should improper or defective work of any trade be covered by another which results in damage or new or continuing defects, the whole of the work affected shall be made good by the Contractor without expense to the City.

7-8 PROJECT SITE MAINTENANCE

7-8.1 Cleanup and Dust Control

Throughout all phases of construction, including suspension of Work, and until final acceptance of the project, the Contractor shall keep the Site clean and free from rubbish and debris. The Contractor shall also abate dust nuisance by cleaning, sweeping, and sprinkling with water, or other means as necessary. The use of water resulting in mud on Streets will not be permitted as a substitute for sweeping or other methods.

The Contractor shall be required to apply water for dust control as required by the Engineer. This includes Saturdays, Sundays and holidays. The cost of water will be paid for by the Contractor. If dust control is not adequate in the opinion of the Engineer, the Engineer will have this Work done by others and will deduct such cost from the total Contract Price.

The Contractor shall furnish and operate a self-loading motor sweeper with spray nozzles at least once each working day to keep paved areas acceptably clean wherever construction, including restoration, is incomplete.

Materials and equipment shall be removed from the Site as soon as they are no longer necessary; and upon completion of the Work and before final inspection the entire Site shall be cleared of equipment, unused materials, and rubbish so as to present a satisfactory clean and neat appearance. All cleanup costs shall be absorbed in the Contractor's bid.

Contractor shall comply with sections 23113, 23114, 23115 and 40,000.16 of the California Vehicle Code regarding containment and transportation of any aggregate material upon public roadways.

All traffic signs and Street signs within the limits of the improvement shall be removed, salvaged and stockpiled at locations designated by the Engineer. Traffic control signs and Street signs will be replaced upon completion of the Work and the cost of removal and replacement will be included in various bid items and no separate payment will be made as such. Rural type mail boxes shall be maintained by the Contractor in a manner satisfactory to the Engineer and to the US Postal Service, and the Contractor shall relocate same as soon as possible to a permanent location in accordance with postal regulations and in a location acceptable to the property owner.

Care shall be taken to prevent spillage on haul routes. Any such spillage shall be removed immediately and the area cleaned.

Excess excavated material from catch basins or similar structures shall be removed from the Site immediately. Sufficient material may remain for use as backfill if permitted by the Specifications. Forms and form lumber shall be removed from the Site as soon as practicable after stripping.

Earth dams will not be permitted at catch basin openings, local depressions, or elsewhere, except in time of emergency. Temporary dams of sand bags, asphaltic concrete or other acceptable material may be permitted when necessary to protect the Work, provided their use does not create a hazard or nuisance to the public. Such dams shall be removed from the Site as soon as their use is no longer necessary.

Failure of the Contractor to comply with the Engineer's cleanup orders may result in an order to suspend Work until the condition is corrected. No additional compensation will be allowed as a result of such suspension.

7-8.2 Air Pollution Control

The Contractor shall not discharge smoke, dust, or any other air contaminants into the atmosphere in such quantity as will violate the regulations of any legally constituted authority.

7-8.3 Vermin Control

At the time of acceptance, structures entirely constructed under the contract shall be free of rodents, insects, vermin and pests. Necessary extermination Work shall be

arranged and paid for by the Contractor as part of the Work within the contract time and shall be performed by a licensed agency in accordance with requirements of governing authorities. The Contractor shall be liable for injury to persons or property and responsible for the elimination of offensive odors resulting from extermination operations.

7-8.4 Sanitation

The Contractor shall provide and maintain enclosed toilets for the use of employees engaged in the Work. These accommodations shall be maintained in a neat and sanitary condition. They shall also comply with all applicable laws, ordinances and regulations pertaining to the public health and sanitation of dwellings and camps.

Sewage flows shall not be interrupted. Should the Contractor disrupt existing Sewer facilities, sewage shall be conveyed in closed conduits and disposed of in a sanitary Sewer system. Sewage shall not be permitted to flow in trenches or be covered by backfill.

7-8.5 Temporary Light, Power and Water

The Contractor shall at his/her own expense furnish, install, maintain, and remove all temporary light, power, and water, including piping, wiring, lamps, and other equipment, necessary for the Work. The Contractor shall not draw water from any fire hydrant, except to extinguish a fire, without first obtaining permission from the water agency concerned.

7-8.6 Water Pollution Control

The Contractor shall exercise every reasonable precaution to protect channels, Storm Drains, and bodies of water from pollution. It shall conduct and schedule operations so as to minimize or avoid muddying and silting of said channels, drains, and waters. Water pollution control Work shall consist of constructing those facilities which may be required to provide prevention, control, and abatement of water pollution.

7-8.7 Drainage Control

The Contractor shall maintain drainage within and through the Work areas. Earth dams will not be permitted in paved areas. Temporary dams of sandbags, asphaltic concrete, or other acceptable material will be permitted when necessary. Such dams shall be removed from the Site as soon as their use is no longer necessary.

7-9 PROTECTION AND RESTORATION OF EXISTING IMPROVEMENTS

The Contractor shall be responsible for the protection of public and private property adjacent to the Work and shall exercise due caution to avoid damage to such property.

Unless otherwise provided, the Contractor shall repair or replace all existing improvements (e.g., curbs, sidewalks, driveways, fences, signs, Utilities, Street surfaces, structures etc.) damaged or removed as a result of his/her operations. Repairs and replacements shall be at least equal to existing improvements, and shall match them in finish and dimension.

Trees, lawns, and shrubbery not designated for removal shall be protected from damage or injury. If damaged or removed because of the Contractor's operations, they shall be restored or replaced to original condition and location. Lawns shall be reseeded and covered with suitable mulch.

The Contractor shall give reasonable notice to occupants or owners of adjacent property to permit them to salvage or relocate plants, trees, fences, sprinklers, and other improvements, within the right-of-way which are designated for removal and would be destroyed because of the Work.

All costs to the Contractor for protecting, removing and restoring existing improvements shall be absorbed in his/her bid.

7-10 PUBLIC CONVENIENCE AND SAFETY

7-10.1 Traffic and Access

Pedestrian and vehicular access to properties shall be provided and maintained at all times, unless arrangements are made with the property owners, their tenants, renters, or lease holders along the streets and alleys, to deviate from this requirement. Exceptions include during the actual placing of concrete or for very short periods during paving operations. Access shall be safe and reasonable for pedestrians and motor vehicles used by the property owners and emergency vehicles (fire, police, and ambulance). The Engineer will make the sole determination of what is safe and reasonable.

The Contractor's failure to provide safe and reasonable pedestrian and vehicular access shall provide just reason to issue a stop work order to the Contractor with no additional working days added to the contract.

The Contractor's operations shall cause no unnecessary inconvenience. The access rights of the public shall be considered at all times. Unless otherwise authorized, traffic shall be permitted to pass through the Work, or a detour approved by the Engineer shall be provided.

Unless otherwise authorized, Work shall be performed in only one half of the Roadway at one time. One half shall be kept open and unobstructed until the opposite side is ready for use. If one half of a Street only is being improved, the other half shall be conditioned and maintained as a detour.

Detours shall be surfaced as approved by the Traffic Engineer.

Grading operations, Roadway excavation and embankment construction shall be conducted by the Contractor in a manner to provide a reasonably satisfactory surface for traffic. When rough grading is completed, the roadbed surface shall be brought to a smooth and even condition satisfactory for traffic.

Safe, adequate, continuous and unobstructed pedestrian and vehicular access shall be maintained to fire hydrants, residences, commercial and industrial establishments, churches, schools, hospitals, etc., unless other arrangements satisfactory to the owners have been made.

Safe and adequate pedestrian zones and public transportation stops as well as pedestrian crossings of the Work at intervals not exceeding 300 feet also shall be maintained unless otherwise approved by the Engineer.

Through the duration of the project, sidewalks or an Americans with Disabilities Act compliant accessible path must remain open and clear.

Vehicular access to residential driveways shall be maintained to the property line except when necessary construction precludes such access for reasonable periods of time. If backfill has been completed to such extent that safe access may be provided, and the Street is opened to local traffic, the Contractor shall immediately clear the Street and driveways and provide and maintain access.

The Contractor shall cooperate with the various parties involved in the delivery of mail and the collection and removal of trash and garbage to maintain existing schedules for these services.

The Contractor shall absorb in his/her bid all costs for the above requirements.

7-10.2 Americans with Disabilities Act Accessibility

If the previous pedestrian facility was accessible to pedestrians with disabilities, the path provided during construction and/or temporary traffic control shall also be accessible.

This will consist of a continuous, unobstructed 48" wide pedestrian path of travel adjacent to the Site, preferably parallel to the same sidewalk that has been obstructed. There shall not be any abrupt changes in grade or terrain that could cause a tripping hazard or could be a barrier to wheelchair use. The Contractor shall install and maintain temporary concrete, asphalt or wood ramps to provide a safe path of travel for mobility-impaired pedestrians at locations where ramps have been temporarily removed or are needed to route pedestrians. Barriers and channelizing devices shall be detectable to pedestrians who have visual disabilities. These considerations include, but are not limited to, the following:

(i) The path of travel shall not have abrupt changes in grade, elevation, or terrain. The path of travel shall have a cross slope of 2% or less; running slope may be equal to that of the topography of the adjacent street.

(ii) Any changes in level in a path of travel that is over ¼" – ½" height shall be beveled at a 45 degree angle to provide a smooth transition.

(iii) Temporary ramps shall be a minimum of 48" wide, with a running slope ratio not to exceed 1:12 (one foot run for every inch of the curb). Sides of a ramp shall be protected where there is a drop off. For all ramps not meeting the definition of a "curb ramp", handrails will be provided in conformance with Title 24 and the Americans with Disabilities Act Design Standards.

(iv) For walkways in the pedestrian path that have less than 5' of clear width,

there shall be provided passing spaces 5' wide every 200 ft. to provide adequate space for two pedestrians in wheelchairs to pass each other.

(v) Signposts, scaffolding and fencing and other supports shall be placed to provide an unobstructed path of travel that is 48" wide and 80" high.

(vi) Closed trenches, temporary paving surfaces, walking surfaces, steel plates, etc. shall have a smoothly finished, firm walking surface made even with surrounding walkways. If plywood is used as a temporary walking surface, it will be a minimum of ¾" in thickness and it will be anchored using either a mechanical fastener, cold mix or asphalt so that it is stable and level with surrounding surfaces.

(vii) When a sidewalk is closed and pedestrian traffic detoured, sidewalk signs indicating that the sidewalk, curb ramp, or both the sidewalk and curb ramp are closed are required. These signs shall be placed so as to provide ample warning of the detour to people with mobility impairments and minimize backtracking. Signs shall be placed so that they are visible from the sidewalk before the detour begins.

(viii) When a sidewalk is completely closed, a barrier that is detectable by a person with a visual disability traveling with the aid of a long cane shall be placed across the full width of the closed sidewalk.

(ix) During detours, access shall be provided by directing all pedestrian traffic to the unaltered side of the street where marked crossings and usable curb ramps exist; if such elements do not exist, temporary marked crosswalks and temporary ramps shall be provided. Any plan proposing temporary marked crosswalks and ramps shall be approved in writing by the Traffic Engineer or his/her designee.

(x) To protect pedestrians with visual disabilities using a mobility cane and to serve as a wheelchair stop, barriers shall have brightly contrasting colors marking each end and a ground rail running the length of each side of the barrier that is attached to the base.

(xi) A-frames and other devices used for defining path of travel shall be connected and maintained to provide a stable guide to help a pedestrian with a visual disability negotiate a safe path while using a cane. These devices shall provide a continuous bottom edge 6" maximum above the ground or walkway surface.

(xii) The bottom 3" of fencing material (e.g. chain link, plastic, etc.) shall be solid to provide a guide for pedestrians with visual disabilities and limit the likelihood that a long cane will be caught in the fence. This may be achieved by attaching a solid material to the bottom portion of the fence.

(xiii) During working hours, open excavations will not be allowed to adjoin or interrupt the pedestrian path. No open excavations will be permitted in pedestrian access areas overnight.

(xiv) Caution tape or its equivalent shall NOT be used by itself to delineate the

path of travel or create a barricade.

(xv) The Contractor shall provide notice to Fresno Area Express (FAX) at (559) 621-1424 twenty-four hours before engaging in work that will impede access to a FAX bus stop to allow the relocation of the bus stop to a temporary, accessible location.

Each project is unique and the Contractor is responsible for and will conduct a thorough review to ensure complete, safe, usable and accessible paths of travel.
All costs involved shall be included in the amount bid for the Work.

7-10.3 Storage of Equipment and Materials in Public Streets

Construction materials may not be stored in Streets, roads, or highways for more than 5 Days after unloading. All materials or equipment not installed or used in the construction within 5 Days after unloading shall be stored elsewhere by the Contractor at his/her expense unless she/he is authorized additional storage time.

Construction equipment shall not be stored at the Site before its actual use on the Work, and shall be removed within 5 Days after it is no longer needed on the Work. Time necessary for repair or assembly of equipment may be authorized by the Engineer.

Excavated material, except that which is to be used as backfill in the adjacent trench, may not be stored in public Streets, roads, or highways unless otherwise permitted. After placing backfill, all excess material shall be removed immediately from the Site.

The Contractor shall arrange his/her Work so as to keep two-way vehicular traffic open at all times, unless the Contract Documents provide otherwise, and will direct and supervise traffic as instructed by the Engineer and shall comply with the instructions and directions of the Traffic Engineer.

7-10.4 Street Closures, Detours, Barricades

The Contractor shall comply with all applicable State, County, and City requirements for closure of Streets. She/He shall provide message boards, delineators, cones, barriers, guards, lights, signs, temporary bridges, flag persons and watch persons, advising the public of detours and construction hazards. She/He shall also be responsible for compliance with additional public safety requirements which may arise during construction. She/He shall furnish and install, and upon completion of the Work, promptly remove all signs and warning devices.

Contractor shall comply with the instructions and directions of the Traffic Engineer.

Traffic Control Systems: The latest Caltrans adopted publication of the "California Manual on Uniform Traffic Control Devices" (MUTCD) is hereby referred to and incorporated herein as if set forth in full. All traffic signs used during the project shall conform in size, shape and color to the MUTCD. The MUTCD shall also apply to the Street closures, barricades, detours, lights, and other safety devices required.

In addition, the following items will be included:

When a regulatory sign is used to prohibit a vehicular movement, two signs must be used. Example: To prohibit left turns, one sign must be at the intersection and another 100' to 200' back from the intersection.

One 12-foot paved lane in each direction must be maintained at all times throughout the construction area. Additional lanes may be required to be open on arterials and expressways. Turn lanes are not to be considered as travel lanes.

Intersections: Intersections may not be closed. A detour and barricading plan must be submitted to the City Traffic Engineering Division at least 48 hours in advance of any work being done. Written approval shall be obtained from the Traffic Engineering Division prior to the beginning of work.

Public Notification: The Contractor will ensure the public is given at least 7 Days notification prior to street closure, and 96 hours notification prior to trail and lane closure. Method of notification must be approved in writing by the Engineer. Any deviation from these requirements must have prior written approval of the Engineer and the City Traffic Engineering Division.

At least **48 hours** in advance of closing, or partially closing, or of reopening, any Street, alley, or other public thoroughfare, the Contractor shall notify the Police, Fire, Bus, Traffic and Engineering Departments of jurisdictional agencies involved, and comply with their requirements. Any deviation from these requirements must have prior written approval of the Engineer and the City Traffic Engineering Division.

Lane closures on all major Streets shall be limited to the hours of 9 am – 4 pm. Full closures of major Streets shall not start until 9 am on the first Day and shall be pre-notified on-Site at least 7 Days in advance of the start of the project. On high volume Streets this may require the use of a changeable message sign as pre-notification. Barricades with lights and proper reflectivity are required at night. Full road closures shall not begin on Fridays.

Lane closures within 250 feet of signalized intersections shall extend to both sides of the intersection. If the Work area moves beyond 250 feet of the intersection, clear the intersection zone of traffic control. (The intersection zone is defined as 250 feet on all sides of the intersection.)

If traffic control already exists in the vicinity, postpone Work in said area until a later date so as not to conflict. Additionally, special events in the vicinity of the Work area may require that road Work will need to be postponed until the event has ended.

Lane closure shall be limited to a ¼ mile prior to and ¼ mile beyond the Work area.

Contractor shall not apply paint to any pavement which is "final" and/or to be "undisturbed," unless specified in the Contract Documents.

The Contractor shall be responsible for removal of any traffic markings and/or signing that may conflict with detour channelization and the placement and removal of any temporary traffic markings and/or signing as may be required by the Traffic Engineer or his/her designee, or desired by the Contractor. Any removal of traffic markings shall be

accomplished by wet sandblasting of the existing markings. Removal of existing striping shall be done by grinding. Grinding depth shall be limited to only what is required to remove the striping from the Roadway surface and no more. Type II Slurry Seal shall be applied to the areas affected by the grinding.

Whenever the Contractor fails to comply with said requirements, safety regulations, instructions or directions, or such additional requirements as may be deemed by the Engineer to be necessary for safety of the workers or the public or property, the Engineer may cause such precautions to be taken by force account or other means at the Contractor's expense.

The Contractor shall secure approval, in advance, from authorities concerned for the use of any bridges proposed by him/her for public use. Temporary bridges shall be clearly posted as to load limit, with signs and posting conforming to current requirements set forth in the MUTCD.

All costs involved shall be absorbed in the Contractor’s bid.

7-10.5 Traffic Control Plan

It is the responsibility of the Contractor to prepare a traffic control, traffic detour and temporary lane delineation plan for use during construction.

It is also the responsibility of the Contractor to obtain the City Traffic Engineering Division’s written approval of the Traffic Control plan prior to the beginning of any work. Approval of the Traffic Control Plan may be rescinded at any time if all necessary signing and barricading is not placed and maintained as required.

Should it become necessary to rescind approval of the Traffic Control Plan, the City shall place and maintain all necessary signing and barricading. Payment for this work shall be charged to the Contractor. Furthermore, non-compliance with any of the stated conditions in this section by Contractor will result in public inconvenience and/or exposure of the public to a dangerous condition, and such inconvenience and exposure is difficult to determine. Therefore, the Contractor agrees that liquidated damages of $1,000.00 per calendar day for each and every calendar day not in compliance with the stated conditions in this section shall be applied during the period whereby approval for the plan has been rescinded. Such liquidated damages shall be in addition to any other liquidated damages withheld from payments under the Contract Documents due to any delay by Contractor. In the event that the total liquidated damages exceeds the final payment due the Contractor, the excess amount shall be due and payable immediately by the Contractor to City.

The City Construction Management Division with the assistance of the Traffic Engineering Division will be observing and directing the Contractor on proper traffic signing and barricading through the construction zone. The Contractor shall provide safe access for the City inspection staff to make their observation.

The Contractor shall strictly comply with, and will be solely responsible for, all required traffic control and devices as per City approved plan and any revisions thereof. The Contractor shall inspect the traffic control setup at two hour intervals at the least and correct all problems immediately.

The Contractor shall be responsible for providing all necessary flagging and maintaining traffic control facilities, 24 hours per day, 7 days per week for the entire duration of the project.

All costs involved shall be absorbed in the Contractor's bid.

7-10.6 Public Safety

7-10.6.1 Safety Orders

The Contractor shall have at the Site, copies or suitable extracts of: Construction Safety Orders, Tunnel Safety Orders, and General Industrial Safety Orders issued by the State Division of Industrial Safety. She/He shall comply with provisions of these and all other applicable laws, ordinances and regulations.

7-10.6.2 Use of Explosives

Explosives may be used only when authorized in writing by the Engineer, or as otherwise stated in the Contract Documents. Explosives shall be handled, used, and stored in accordance with all applicable laws and regulations.

7-10.6.3 Special Hazardous Substances and Products

Materials that contain hazardous substances or mixtures may be required on the Work. A Material Safety Data Sheet as described in Section 5194 of Title 8 of the California Code of Regulations shall be requested by the Contractor from the manufacturer of any hazardous products used.

Material usage shall be accomplished with strict adherence to the State Division of Industrial Safety requirements and all manufacturer warnings and application instructions listed on the Material Safety Data Sheet and on the product container label.

The Contractor shall notify the Engineer if a specified product cannot be used under safe conditions.

7-10.6.4 Confined Spaces

a) Confined Space Entry Program (CSEP). The Contractor shall be responsible for implementing, administering and maintaining a confined space entry program (CSEP) in accordance with Sections 5156, 5157, and 5158, of Title 8, of the California Code of Regulations (CCR).

   Prior to starting the Work, the Contractor shall prepare and submit its comprehensive CSEP to the Engineer. The CSEP shall address all potential physical and environmental hazards and contain procedures for safe entry into confined spaces, including, but not limited to the following:

   1. Training of Personnel

2. Purging and cleaning the space of materials and residue
3. Potential isolation and control of energy and material inflow
4. controlled access to the space
5. Atmospheric testing of the space
6. Ventilation of the space
7. Special hazards consideration
8. Personal protective equipment
9. Rescue plan provisions

The Contractor's submittal shall include the names of its personnel, including Subcontractor personnel, assigned to the project who will have CSEP responsibilities, their CSEP training, and their specific assignment and responsibility in carrying out the CSEP.

b) Permit-Required Confined Spaces. Entry into permit-required confined spaces as defined in 8 CCR 5157 may be required as a part of the Work. All manholes, tanks, vaults, pipelines, excavations, or other enclosed or partially enclosed spaces shall be considered permit-required confined spaces until the pre-entry procedures demonstrate otherwise. The Contractor shall implement a permit spaces program prior to performing any Work in a permit-required confined space. A copy of the permit shall be available at all times for review by Contractor and City personnel at the Site.

c) Payment. Payment for implementing, administering, and providing all equipment and personnel to perform the CSEP shall be included in the bid items for which the CSEP is required.

7-11 HAZARDOUS CONDITIONS: CONTRACTOR'S RESPONSIBILITY FOR PRECAUTIONS

Contractor agrees that if, during the progress of the Work there is created, by reason of the use of specified materials or equipment, the location of the Work or the condition of the Site, the kind or method of the construction specified, or the manner in which any of the Work is required to be done, or for any other reason, any condition which involves a peculiar risk of bodily harm to any Person(s), or of damage to property of City or others, Contractor will take such special precautions as shall be necessary to make the progress of the Work safe under such condition. Contractor further agrees to assume the sole responsibility for determining whether any such hazardous condition exists or will be created during the course of the Work.

7-12 PATENT FEES OR ROYALTIES

The Contractor shall absorb in his/her bid, the patent fees or royalties on any patented article or process which may be furnished or used in the Work. The Contractor shall indemnify and hold the City harmless from any legal action that may be brought for infringement of patents.

7-13 ADVERTISING

The names of the Contractor, Subcontractors, architects, or engineers, with their addresses and the designation of their particular specialties, may be displayed on removable signs. The size and location of such signs shall be subject to the Engineer's approval.

Commercial advertising matter shall not be attached to or painted on the surfaces of buildings, fences, canopies, or barricades.

7-14 RISK OF LOSS

Until the completion and formal acceptance of the completed Work by the City, the Contractor shall have the charge and care thereof and shall bear all risks of injury or damage to or destruction of, the Work or any part or parts thereof, or any materials or equipment delivered to the Site thereof, by fire, earthquake, windstorm or other action of the elements, vandalism, or from any other cause, including loss by theft, from the date of commencement of construction to the date of such formal acceptance. The Contractor shall rebuild, repair, restore and make good all injuries or damage to any portion of the Work, and shall bear the entire expense thereof, except such injuries or damages as are caused by riot, insurrection, or acts of the Federal or State government or a public enemy in time of war.

7-15 CONTRACTOR'S RESPONSIBILITY FOR SITE CONDITIONS

Contractor shall assume sole and complete responsibility for Site conditions during the course of construction of the Work, including safety of all persons and property. This requirement shall apply continuously and not be limited to normal working hours.

The Contractor has fully acquainted himself/herself with all existing conditions and limitations affecting the Work pursuant to Contractor's Site inspections, the Specifications and the soils and other geotechnical tests (without any representation or warranty from City) delivered to Contractor. All dimensions and clearances necessary to perform the Work, as indicated on the Plans and contained in the Specifications, shall be verified by the Contractor at the Site and the Contractor shall report any discrepancies to the Engineer for adjustment before any Work affected thereby is prosecuted. Contractor shall assume full responsibility for Site conditions, including, without limitation, any concealed conditions. Contractor acknowledges that the Contract Price contains a contingency to assume such risks.

Before starting each portion of the Work, the Contractor shall confirm the information furnished by the City pursuant to the Contract Documents, confirm or take, as applicable, field measurements of any existing conditions related to that portion of the Work and shall observe any conditions at the Site affecting it. These obligations are for the purpose of facilitating construction by the Contractor, and any errors, inconsistencies or omissions discovered by the Contractor shall be reported promptly to the Engineer as a request for information in such form as the Engineer may reasonably require.

If Contractor performs any Work in conformity with any Contract Documents knowing it to be inconsistent with any other Contract Documents, without first specifically requesting and obtaining from Engineer and City written instructions on how to proceed with respect to such inconsistency, Contractor shall be obligated to correct such Work according to the direction of Engineer (with City's approval), without cost to City, including Contractor bearing the full amount of the attributable costs for correction as well.

7-16 WARRANTY

Contractor does hereby assign and transfer to City all warranties heretofore or hereafter received by Contractor with respect to materials and equipment utilized in the Work and services furnished by Subcontractors or suppliers; provided, however, that City and Contractor

agree that during the warranty period, hereafter referred to, Contractor shall be obligated to enforce such warranties at no cost or expense to City.

Contractor warrants to City that the Work (whether labor and materials are furnished by Contractor, any Subcontractor or other party under the control of Contractor) shall be constructed and completed in a good and workmanlike manner and in compliance with the Contract Documents and will be free from any defect in workmanship or detail for a period of one (1) year after the date of Completion of the Work or designated portion thereof or by the terms of an applicable special warranty required under the Contract Documents. The warranty obligation under this section shall survive acceptance of the Work under the contract and termination of the contract. The warranties of Contractor under the preceding sentence and the duties of Contractor referred to in the next paragraph constitute the “warranty obligations” of Contractor hereafter referred to in this section. If Contractor does not promptly comply with the terms of the warranty obligations within a reasonable period of time under the circumstances (generally not to exceed 30 Days, unless otherwise expressly provided in the Contract Documents), or promptly in any emergency where delay would cause serious risk of bodily injury, death or substantial property damage, City may have the defective Work corrected or the rejected Work removed and replaced, and all costs of such removal and replacement, including compensation for additional professional services, shall be paid by Contractor.

Upon completion or correction of any Work under or pursuant to this section, the one (1) year correction period in connection with the Work requiring correction or completion shall be renewed and recommence, but only as to that portion of the Work corrected or renewed and subject to a maximum correction period of two years after substantial completion of the Work that was corrected or renewed. The obligations under this section shall cover any repairs and replacement to any part of the Work or other property caused by the defective Work.

If the City prefers to accept defective or non-conforming Work, City may do so instead of requiring its removal and correction, in which case a Change Order will be issued to reflect a reduction in the Contract Price where appropriate and equitable. Such adjustment shall be effected whether or not final payment has been made.

Nothing contained in this section shall be construed to establish a period of limitation with respect to any other obligation, which Contractor might have under the Contract Documents. The establishment of the time period of one year after the date of Substantial Completion or such longer period of time as may be prescribed by law or by the terms of any warranty or guaranty required by the Contract Documents relates only to the specific obligation of Contractor to correct the Work, and has no relationship to the time within which his/her obligation to comply with the Contract Documents may be sought to be enforced, nor to the time within which proceedings may be commenced to establish Contractor's liability with respect to Contractor's obligations other than specifically to correct the Work. Contractor's express warranty herein shall be in addition to, and not in lieu of, any other warranties or remedies City may have under the contract, at law, or in equity for defective Work.

SECTION 8 – MEASUREMENT AND PAYMENT

8-1 MEASUREMENT OF QUANTITIES FOR UNIT PRICE WORK

Unless otherwise specified, quantities of Work shall be determined from measurements or dimensions in horizontal planes. However, linear quantities of pipe, piling, fencing, and timber shall be considered as being the true length measured along the longitudinal axis. Sewer House Branches will be measured from the Sewer main in the horizontal plane.

Unless otherwise provided in the Contract Documents, volumetric quantities shall be the product of the mean area of vertical or horizontal sections and the intervening horizontal or vertical dimension.

8-1.1 Methods of Measurement

Materials and items of Work which are to be paid for on the basis of measurement shall be measured in accordance with the methods stipulated in the particular sections involved.

8-1.2 Certified Weights

When payment is to be made on the basis of weight, the weighing shall be done on certified platform scales or, when approved by the Engineer, on a completely automated weighing and recording system. The Contractor shall furnish the Engineer with duplicate licensed weigh masters certificates showing the actual net weights. The City will accept the certificates as evidence of the weights delivered.

8-1.3 Units of Measurement

Measurements shall be in accordance with U. S. Standard Measures. A pound is an avoirdupois pound. A ton is 2,000 pounds avoirdupois. The unit of liquid measure is the U.S. gallon.

8-2 PAYMENT

8-2.1 Monthly Payment Date, Quantity and Estimate of Value

The Engineer will, after award of a contract, establish a monthly payment date. This date will be the date during the life of the contract, which will terminate each working month.

Each month, the Engineer will make an approximate measurement of the Work performed to that date and estimate its value based on the Contract Unit Prices. When the Work has been satisfactorily completed, the Engineer will determine the quantity of Work performed and prepare the final estimate of its value.

8-2.2 Retainage

All applications for payment by Contractor shall contain and reflect a deduction for retainage equal to 5% of the value of Work performed by Contractor and each Subcontractor, who has performed Work covered by the application for payment).

Unless a greater percentage of retainage is otherwise specified in the Contract Documents to be withheld from progress payments, 5% will be deducted from each payment and retained by the City; and the remainder, less the amount of any previous payment for the Work performed, will be paid to the Contractor subject to other provisions of this section. Such retainage shall be withheld by City until final payment following issuance of a final acceptance certificate by City, provided that City may, at its option and without any obligation to do so, release retention for certain Subcontractors on an ad hoc basis, provided that City receives a waiver and release of liens, and written consent of the applicable Surety, if any, in a form acceptable to City.

Under no circumstance shall any provision of this section be construed to limit the ability of the City to withhold 150 percent of the value of any disputed amount of Work from the final payment. In the event of a good faith dispute, nothing in this section shall be construed to require the City to pay for Work that is not approved or accepted in accordance with the Plans and Specifications.

In addition to the right of City to withhold payment of retainage amounts and to disapprove applications for payment in whole or in part pursuant to this section above, City shall also have the right to withhold payment of any amount otherwise payable to Contractor as a result of City's notice or discovery of (i) defective portions of the Work or portions of the Work, which have not been completed in accordance with the Contract Documents; or (ii) provided Contractor has been paid for undisputed Work in accordance with this contract, the filing of claims by Subcontractors, suppliers, or agents of Contractor, or receipt of reasonable evidence indicating the probability of the future filing of a claim or a stop notice (provided that at such time as a stop notice is actually filed and Contractor provides and records a release bond in accordance with applicable law, City shall pay to Contractor the sum previously withheld as a result of such stop notice); or (iii) the failure of Contractor to make payments promptly to Subcontractors; or (iv) reasonable evidence that the Work cannot be completed for the unpaid balance of the Contract Price; or (v) reasonable evidence that the Work will not be substantially complete and/or finally complete on the date(s) required therefor; or (vi) damage to City or a separate contractor, agent or representative of City, if Contractor is responsible for the damage, provided that City shall not be entitled to withhold payment for damage to the extent that City receives insurance proceeds to reimburse City for such damage; or (vii) failure of Contractor to carry out and perform any portion of the Work in accordance with the Contract Documents.

The foregoing shall not limit City's right to pursue Contractor for all damages, including permitted consequential damages, and remedies that are available to City due to Contractor's material breach or failure to perform its obligations hereunder.

8-2.3 Judge of Performance under the Contract Documents

City (with the consultation of any consultants) shall be the judge of the performance under the Contract Documents, and in acting as such judge, City shall at all times be deemed to have acted reasonably and in good faith. At the request of City, its consultants will render such interpretations of the Contract Documents as City may deem necessary for the proper execution or progress of the Work.

City's representatives will provide administration of the Contract Documents as hereinafter described and may delegate any part of such obligation to its consultants,

but such delegation shall not limit City's representative's right to require City's concurrence or approval of the consultants' actions, if City so elects.

City's representatives will, with the assistance of and (if requested by City) the written interpretation of City's consultants, be the interpreter of the requirements of the Contract Documents and the judge of the performance thereunder by Contractor.

City's representatives, with the assistance of City's consultants, will have authority to reject Work, which does not conform to the Contract Documents. Whenever, in City's representatives' opinion, or that of its consultants, it is necessary or advisable for the implementation of the Contract Documents, City's representatives will have authority to require special inspection or testing of the Work whether or not such Work is then fabricated, installed or completed.

However, neither City's representatives' authority to act under this nor any decision made by them in good faith either to exercise or not to exercise such authority, shall give rise to any duty or responsibility of City or City's representative to Contractor or any Subcontractor, or to their respective agents or employees, or any other person performing any of the Work.
The quantities listed in the Contract Documents do not govern final payment. Payments to the Contractor will be made only for the actual quantities of contract items constructed in accordance with the Plans and Specifications. If, upon completion of the construction, these actual quantities show either an increase or decrease from the quantities given in the Contract Documents, the Contract Unit Prices will still prevail.

Payment will not be made for materials wasted or disposed of in a manner not called for under the Contract Documents. This includes, without limitation, rejected material not unloaded from vehicles, material rejected after it has been placed and material placed outside of the plan lines. Unless otherwise expressly provided, no payment will be made for materials delivered to the Site but not incorporated in the Work. Such quantities will not be included in the final pay quantities. No compensation will be allowed for disposing of rejected or excess material.

8-2.4 Final Payment

The final application for payment shall be accompanied by all documentation called for in the Contract Documents for making of progress payments and Final Payment, together with complete and legally effective releases and waivers of all encumbrances arising out of or related to the Work. Said application shall set forth the following information, at a minimum:

(1) Cost of the Work in permanent place as of the end of the immediately preceding month as shown on the updated construction schedule and Schedule of Values submitted with the Contractor’s application;

(2) Less amounts previously paid and previously withheld as retention;

(3) The amount currently due; and

(4) An itemized list of disputed amounts, if any.

Final Payment, constituting the entire unpaid balance of the Contract Price, shall be made by the City to the Contractor following receipt of Contractor's final application for payment and in accordance with the Contract Documents when:

(1) the Contractor has fully performed the contract except for the Contractor's responsibility to correct Work under warranty provisions of the contract, and to satisfy other requirements, if any, which extend beyond Final Payment; and a Final Certification of Acceptance and Certificate for Payment has been issued by the Engineer;

(2) Issuance of final inspection approvals by all governmental authorities;

(3) Contractor delivers its unconditional final waiver and release in the form provided by the Contract Documents for all purposes contemporaneously with its receipt of such payment;

(4) Contractor delivers unconditional final waiver and release forms from all Subcontractors (all tiers) and suppliers providing services, labor and/or materials to the project, including those paid out of the final payment;

(5) Receipt by the City of As-Built drawings consisting of one set of the final drawings redlined with changes made during the performance of the Work with City's approval;

(6) Satisfaction by Contractor of the remaining close-out procedures and other final payment requirements described in the Specifications, if any;

(7) Any and all final reports for acceptance testing have been received by, and determined acceptable to, the Engineer;

(8) Reimbursement by Contractor to the City for all tests and inspections, as required by the Specifications;

(9) Submission by Contractor to the Engineer for transmittal to the City of all required written guarantees and warranties;

(10) The return to the Engineer of all drawings and written Specifications loaned to the Contractor during the construction period;

(11) Delivery to City of tests/adjust/balance records, maintenance instructions, meter readings, start-up performance reports and similar change-over information relevant to City's occupancy, use, operations and maintenance of the completed Work; and

(12) Removal of temporary facilities, services, surplus materials, rubbish and similar elements.

The City's final payment and release of the punchlist holdback and any other sums withheld by City pursuant to this section, including retainage, to the Contractor shall be made no later than 30 days after the City's confirmation that Substantial Completion has

occurred, provided that all punchlist items have been completed and the conditions described herein have been satisfied to City's satisfaction.

"Acceptance" of the Work shall mean only written acceptance signed by the Engineer. Acceptance by the City and the Engineer will be made promptly after the contract has been fully completed, final inspection made, and the final certificate of acceptance by the Engineer issued. In judging the Work, no allowances for deviations from the Plans and Specifications will be made, unless already accepted in writing at the times and in the manner provided in the Specifications.

Notwithstanding any other provision of the contract, the City reserves the right to (i) off-set any payment due the Contractor against any debt due from the Contractor to the City pursuant to this contract, (ii) withhold liquidated damages assessed by City against the Contractor, (iii) withhold amounts owed by Contractor for penalties assessed for Contractor's violation of any labor laws or deficient certified payroll, (iv) further withhold payment as required by law, and (v) make payments for Work performed or materials furnished under an assessment proceedings contract as provided in the particular proceedings or legislative act under which such contract was awarded.

SECTION 9 – (RESERVED)

SECTION 10 – CLEARING AND GRUBBING

10-1 GENERAL

Clearing and grubbing shall consist of the removal and disposal of all materials, roots, existing concrete and other obstructions as required by the Plans and Specifications.

10-2 PRESERVATION OF PROPERTY

Whether shown on the Plan or not, existing improvements, adjacent property, Utility and other facilities, and trees and plants that are not to be removed shall be protected from injury or damage resulting from the Contractor's operations.

The Contractor shall make such investigations and examinations as are required to determine the existence and locations of all pipes, conduits, and other underground improvements and shall consult with and advise the owners of the Utilities before undertaking any work that might endanger them.

The Contractor shall assume full responsibility for any damage to pipes, conduits, poles, or any other structures or Utilities. She/He shall not make any claim for inconvenience, delay or added cost of performing the Work which may be attributed in any degree to inaccuracy of information furnished by the City relative to the locations, sizes, dimensions, depths, and character of any pipes, conduits, poles, or other structures and Utilities or for failure of the City to furnish any information relative thereto.

The City does not guarantee the accuracy or completeness of any data shown on the Plans relative to the locations, sizes, dimensions, depths, and character of pipes, conduits, poles or any other structures or Utilities located above ground or underground.

At locations where lawn sprinkler systems exist, the Contractor will cut and cap water lines at the property lines or at such point as directed by the Engineer. All heads and pipe removed shall be salvaged and returned to their respective owners. Full compensation for cutting and capping water lines shall be considered as included in this item.

Existing land subdivision monuments and stakes shall be fully protected from damage or displacement and they shall not be disturbed unless directed by the Engineer.

10-3 CLEARING AND GRUBBING OPERATIONS

Clearing and grubbing shall conform to the provisions in Section 16 of the State Standard Specifications and these provisions.

Unless otherwise specified, the entire area within the Project limits shall be cleared and grubbed. No payment will be made to the Contractor for clearing and grubbing outside these limits, unless such work is authorized by the Engineer.

All of the Work shown on the Plans and included in these Specifications that is located in the public Streets in the City of Fresno shall be done in accordance with the City of Fresno Municipal Code regulating the use of public Streets within the City, except as otherwise provided herein. (See Chapter 13, Article 2, of the Fresno Municipal Code as may be amended from time-to-time).

The Contractor shall inform himself/herself as to all regulations and requirements of the City of Fresno and shall conduct his/her operations in compliance therewith.

Concrete removal shall conform to the provisions in Section 15.3 of the State Standard Specifications and these provisions. Where a portion on an existing concrete facility is to be removed, it shall be cut to a minimum depth of 1 1/2 inches with an abrasive type saw at the first scoring line at or outside the planned joint and removed without damage to any portion that is to remain in place. If curbs and gutters cannot be cut off square and neat, the entire curb and gutter shall be removed to the nearest weakened plane or expansion joint. No patching at expansion joints will be permitted.

All concrete (Portland or asphalt) and oil dirt within the right-of-way shall be removed by the Contractor unless designated to remain on the Plans. Existing manholes, drain wells, drainage structures, irrigation lines, structures and headwalls to be abandoned shall be removed to at least 2 feet below the surface and backfilled <u>or as specified in the Special Conditions</u>.

Where existing house foundations and floor slabs overlap into the project area, the whole foundation will be removed. The portion beyond and outside the project area will be considered within the project area and included in the bid price of removing concrete.

10-4 REMOVAL AND DISPOSAL OF MATERIALS

Within the limits of clearing, all stumps, large roots, buried logs, and all other organic material shall be removed 3 feet below the existing ground surface or 6 feet below finished grade, whichever is deeper.

Trees and plants that are not designated for removal shall be fully protected from injury by the Contractor at his/her expense. Trees shall be removed in such a manner as not to injure standing trees, plants, and improvements which are to be preserved.

10-5 PAYMENT

The lump sum price bid for clearing and grubbing shall include full compensation for furnishing all labor, materials, tools, equipment and incidentals and for doing all the Work involved in clearing and grubbing as shown on the Plans, and in the Specifications, and as directed by the Engineer, including the removal and disposal of all the resulting materials.

When the contract does not include a pay item for clearing and grubbing as above specified, and unless otherwise provided in the Special Conditions, full compensation for any necessary clearing and grubbing required to perform the construction operations specified shall be considered as included in the price bid for other items of Work and no additional compensation will be allowed therefor.

SECTION 11 – EXCAVATION & GRADING

11-1 GENERAL

Excavation and grading shall consist of the removal and disposal of all earth, pavement, and rock as required on the Plans and as hereinafter specified. The item shall also include the construction of roadway or area fills to conform to the line and grade given on the Plans.

11-2 EARTHWORK

Earthwork shall conform to the provision in Section 19 of the State Standard Specifications and these provisions.

Cut slopes shall be rounded.

Unsuitable and surplus material shall be disposed of outside the project area in accordance with the provisions in Section 19 of the State Standard Specifications.

The limits of excavation for compacting original ground as provided for in Section 19 of the State Standard Specifications shall be the limits shown on the Plans. Center islands will only require a relative compaction of 90% as determined by ASTM 1557.

11-3 ROADWAY EXCAVATION

Roadway excavation is the removal and replacement of material required within the roadway to construct the subgrade, including the removal of unsatisfactory material, to the grade and cross-section as shown on the Plans. “Roadway,” as used in this section, shall include all facilities within the Street right-of-way, including the Street, sidewalk, curb and gutter, medians, driveways, alleys, easements, landscaping or other surface improvement work.

The subgrade to receive aggregate base or subbase, or asphalt concrete shall be prepared as follows:

> The native material shall be bladed or disced to a depth of 6 inches and all rocks hardpan chunks or otherwise unsuitable material over 2-1/2 inches in size, shall be removed and disposed of off the Site.
>
> The material thus disced or bladed shall be thoroughly mixed, watered and rolled to a relative compaction of not less than 95% as determined by ASTM 1557.
>
> The surface of the completed sub-grade shall not vary more than 0.05 foot above or below established grade.
>
> Before aggregate bass or asphalt concrete paving is placed the Engineer may require (at the Contractor's expense) a test roller of size and weight to meet his/her approval to pass over the finished sub-grade to ensure that there are no soft or spongy areas.
>
> No aggregate base or asphalt concrete paving shall be placed until the finished sub-grade is in a condition satisfactory to the Engineer.

11-4 DUST CONTROL (See Section 7-8.1)

11-5 MISCELLANEOUS HIGHWAY FACILITIES

The removing, reconstructing adjusting, remodeling, and salvaging of the various highway facilities shall conform to the provisions in Section 15 of the State Standard Specifications and these provisions.

All miscellaneous highway facilities within the highway right-of-way, except those noted on the Plans, shall be removed.

11-6 PAYMENT

Quantities of roadway excavation will be paid for at the Contract Unit Price per cubic yard. Such price and payment shall include all labor, materials, tools, equipment and incidentals for performing the excavation and compaction of sub-grade as shown on the Plans and required under these Specifications and the Special Conditions.

Removing miscellaneous highway facilities will not be paid as a separate item, but shall be included in the price for excavation.

SECTION 12 – AGGREGATE SUBBASE AND AGGREGATE BASE

12-1 GENERAL

Aggregate subbase and base materials shall consist of mineral aggregate, spread and compacted on a prepared sub-grade or subbase in accordance with Sections 25 and 26 of the State Standard Specifications. Sub-grade shall be placed in accordance with Section 11 of these City Standard Specifications.

12-2 AGGREGATE SUBBASE

Aggregate subbase shall be Class 2 and shall conform to the provisions in Section 25 of the State Standard Specifications.

12-3 AGGREGATE BASE

Aggregate base shall be Class 2 and shall conform to the provisions in Section 26 of the State Standard Specifications and these Specifications.

The grading for 3/4 inch maximum aggregate shall be used.

12-4 COMPACTION

The relative compaction of each layer of compacted aggregate subbase and aggregate base material shall not be less than 95 percent as determined by ASTM 1557.

12-5 USE OF RECYCLED MATERIALS

The use of recycled materials for aggregate base and aggregate subbase shall consist of broken and crushed asphalt concrete or Portland cement concrete and may contain crushed aggregate base or other rock. The material shall be free of other deleterious material as defined in this section. The gradation and quality requirements shall comply with Section 26 for Class 2 Aggregate Base of the State Standard Specifications.

Recycled material shall be free of any detrimental quantity of soft, friable, thin, elongated or laminated pieces, disintegrated material, organic matter or other deleterious substance.

12-6 TESTING OF MATERIALS

The Contractor shall provide mix designs, certifications and recent quality testing in accordance with Sections 25 and 26 of the State Standard Specifications. Quality testing is to be provided for all aggregates and performance testing is to be provided on all mix designs.

The City may perform random testing on stockpiles at the City's expense for verification of Specification compliance.

12-7 MEASUREMENT OF MATERIAL & PAYMENT

When payment is to be calculated upon the weight of material delivered, the Contractor shall be responsible for furnishing the Engineer with a daily record of the weight of all material

which is to be paid for by the ton and which has been delivered to the Site. Said record shall be certified for authenticity of Scale Weights by a Public Weigh-master and shall become the basis of payment for the materials itemized therein.

In addition, each delivery truck shall carry to the Site a load slip for the material transported in said truck. The load slip shall be delivered to the Engineer by the driver at the time and site of delivery of the truck-load of material covered by the load slip.

SECTION 13 – ASPHALT CONCRETE PAVEMENT

13-1 GENERAL

Asphalt concrete pavement shall consist of furnishing and mixing aggregate and asphalt binder at a central mixing plant and spreading and compacting the mixture in accordance with Section 39 of the State Standard Specifications. The bid item shall also include paint binder and seal coat.

13-2 AGGREGATE MATERIAL

Aggregate material shall conform to the Specifications of Section 39 of the State Standard Specifications for ¾ inch maximum aggregate (medium) or ½ inch maximum aggregate (medium). Where more than 2 inches of A.C. are required, the first course shall be ¾ inch maximum aggregate (medium), and the final course shall be ½ inch maximum aggregate (medium). Where only 2 inches of A.C. are required, the gradation shall conform to ½ inch maximum aggregate (medium).

13-3 ASPHALT CONCRETE

Asphalt concrete shall be Type A and shall conform to the provisions in Section 39 of the State Standard Specifications and these Specifications, except the asphalt concrete mix design as outlined in Section 13-8 of these Specifications.

The asphalt binder to be mixed with aggregate shall conform to the provisions of Section 92 of the State Standard Specifications, and shall be PG 64-10 or as directed by the Engineer.

A self propelled paving machine may not be required in small, difficult unique areas if approved by the Engineer.

13-4 PAINT BINDER

A paint binder of asphaltic emulsion shall be applied to the areas to be surfaced in accordance with the following provisions, when there are contract items for such Work:

1) Paint binder shall be applied only so far in advance of placing the surfacing as may be permitted by the Engineer.

2) Paint binder shall be furnished and applied in accordance with the provisions in Section 94, "Asphaltic Emulsions," of the State Standard Specifications, and shall be applied to all vertical surfaces of existing pavement, curbs, gutters, and construction joints in the surfacing against which additional material is to be placed, to a pavement to be surfaced, and to other surfaces designated by the Engineer.

3) Paint binder shall be applied in one application at a rate of from 0.02 to .0.10 gallon per square yard of surface covered. The exact rate of application will be determined by the Engineer.

4) Where ordered by the Engineer, sand cover shall be applied to driveways and public road approaches, and other areas as ordered.

13-5 SLURRY SEAL

Slurry seal shall be as specified in the Special Conditions and shall conform to Section 37 of the State Standard Specifications. Aggregate type for seal coat shall be type II. Asphaltic emulsion gradation shall be medium fine, 5/16 inches maximum. All existing striping, pavement markings, and raised pavement makers shall be removed by mechanical means prior to the application of the seal coat. All water valve lids, survey monuments, and utility manhole covers shall be protected prior to application and cleaned after the slurry has set.

13-6 ROLLING EQUIPMENT

Except as hereinafter specified, rolling equipment shall be as required under Section 39 of the State Standard Specifications.

At locations where miscellaneous areas are to be surfaced in accordance with the provisions in Section 39 of the State Standard Specifications and where the width of asphalt concrete to be placed is less than 8 feet or the total thickness of asphalt concrete to be placed is less than 0.1 foot, the required minimum rolling equipment specified in Section 39 of the State Standard Specifications may be reduced to one 8-ton, 2-axle tandem roller for each 100 tons, or fraction thereof, of asphalt concrete placed per hour by each asphalt paver. Areas which are inaccessible to an 8-ton 2-axle roller shall be thoroughly compacted to the lines, grades and cross section by means of pneumatic tampers or by other methods that will produce the same degree of compaction as specified in Section 39 of the State Standard Specifications.

If the finished surface of the asphalt concrete does not meet the specified surface tolerances, the finished surface shall be brought within tolerance by either (1) abrasive grinding (with fog seal coat applied on the areas which have been ground), (2) removal and replacement, or (3) placing an overlay of asphalt concrete. The method will be selected by the Engineer. The corrective work shall be at the Contractor's expense.

If abrasive grinding is used to bring the finished surface to specified surface tolerances, additional grinding shall be performed as necessary to extend the area around in each lateral directions so that the lateral limits of grinding are at a constant offset from, and parallel to the nearest lane line or pavement edge, and in each longitudinal direction so that the grinding begins and ends at lines normal to the pavement centerline, within any ground area. All ground areas shall be neat rectangular areas of uniform surface appearance. Abrasive grinding shall conform to the requirements in Section 42.3, "Grinding," of the State Standard Specifications.

13-7 FINISHING ROADWAY

Finishing roadway shall conform to the provisions of Section 22 of the State Standard Specifications.

13-8 MIX DESIGN

The Contractor shall submit to the Engineer a proposed mix design for each asphalt concrete mixture to be used at least two weeks prior to production of that asphalt concrete mixture. The proposed mix designs shall conform to the asphalt concrete mixture quality requirements specified in Section 39-1 of the State Standard Specifications.

The Contractor shall furnish test data in support of each proposed mix design including asphalt concrete quality requirements for California Test 305, Swell; California Test 307, Moisture Vapor Susceptibility; and California Test 366, Stabilometer Value. The test data furnished shall be for an asphalt concrete mixture that conforms to the proposed target values for the asphalt binder content. The Contractor shall submit the following for each asphalt concrete mixture proposed for use under the contract:

A. Aggregate and Mineral Filler:

1. Target values for percent passing each sieve size for the aggregate blend. The proposed target values, for the specified type and aggregate size, shall conform to the aggregate gradation limits specified in Section 39-1.02E, "Aggregate," of the State Standard Specifications.

2. Results of tests for aggregate quality requirements specified in Section 39-1.02E, "Aggregate," of the State Standard Specifications.

3. Source of each aggregate to be used.

4. Percentage of each aggregate stockpile or hot bin to be used.

5. Gradation of each aggregate stockpile or hot bin to be used.

B. Asphalt Binder:

1. Target value for asphalt binder content for each proposed asphalt concrete mixture.

2. Results of the asphalt binder quality tests as specified in Section 92, "Asphalts," of the State Standard Specifications.

Asphalt concrete production for this project shall not begin until the Contractor has received written notification that the proposed mix design has been accepted by the Engineer.

Adjustments from one mix design to another shall not be made during the progress of the Work, unless permitted in writing by the Engineer. The Contractor shall submit to the Engineer a proposed mix design for each new asphalt concrete mixture to be used at least two weeks prior to production of that mixture. Changes in stockpile or hot bin proportions to conform to aggregate grading requirements will not be considered changes in the approved mix design.

13-9 PAYMENT

Payment shall be as specified in the project Specifications.

SECTION 14 – CURB, GUTTER, SIDEWALK, DRIVEWAY, ALLEY APPROACHES AND VALLEY GUTTERS

14-1 GENERAL

Portland cement concrete curb, gutter, sidewalk, driveway approaches, alley approaches and valley gutters shall be constructed complete and in place in accordance with Section 73 of the State Standard Specifications, Plans, standard details, and as hereinafter specified. The bid item shall also include the necessary base material.

14-2 PORTLAND CEMENT CONCRETE

Portland Cement Concrete shall be 6 sack Class A concrete in conformance with Section 90, “Concrete,” of the State Standard Specifications with a maximum slump of four (4) inches, except that for contracts let by the City and for subdivision construction, 5 sack Class B concrete may be used if approved by the Engineer.

14-3 READY-MIXED CONCRETE

Ready-mixed concrete shall conform to Section 90, “Concrete,” of the State Standard Specifications.

14-4 CONSTRUCTION

Concrete curbs and sidewalks shall conform to the provisions in Section 73 of the State Standard Specifications and these City Standard Specifications.

The sub-grade shall be constructed true to grade and cross-section, as shown on the Plans or directed by the Engineer. It shall be thoroughly watered and rolled or hand tamped to obtain a relative compaction under the curb and gutter of 95% and the sub-grade under sidewalks shall have a relative compaction of 90% as determined by ASTM 1557.

All soft and spongy material shall be removed to a depth of not less than six inches below sub-grade elevation for curbs, gutters, local depressions and driveways and three inches below for sidewalks and the resulting space filled with earth, sand or gravel then moistened and rolled or tamped to form a firm and solid foundation.

Expansion joints for curb and gutter shall be constructed a minimum of every 90 feet and at the ends of curb returns with weakened plane joints placed every 15 feet.

Expansion joints for sidewalks shall be constructed a minimum of every 45 feet and at the ends of curb returns with weakened plane joints placed every 15 feet.

Expansion joints shall be tooled with a 1/4" maximum radius edger.

Weakened plane joints may be made by the use of plastic materials. Plastic weakened plane joint material shall be at least one inch deep, T-shaped 1/16" thick plastic strip, with a minimum 3/4" wide Pull-Top stiffener. This plastic strip shall have suitable anchor to prevent vertical movement. After preliminary troweling, the concrete shall be parted to a depth of approximately 2" with a joint thin metal straight edge. The plastic strip shall then be inserted in the impression so that the upper surface of the pull-top stiffener is flush with the concrete

and pull-top stiffener is immediately peeled off. After the pull-top is removed the concrete shall be floated to fill all voids adjacent to the strip. During final troweling, the edges at plastic control joints shall be finished to a radius not to exceed 1/8" using a slit jointer tool. The finished joint opening shall not be wider than 1/8" exclusive of radii.

Extruded curb and curb and gutter construction if used shall be in accordance with Section 73 of the State Standard Specifications.

Concrete removal shall conform to the provisions in Section 15 of the State Standard Specifications and these provisions. Where a portion on an existing concrete facility is to be removed, it shall be cut to a minimum depth of 1 1/2 inches with an abrasive type saw at the first scoring line at or outside the planned joint and removed without damage to any portion that is to remain in place. If curbs and gutters cannot be cut off square and neat, the entire curb and gutter shall be removed to the nearest weakened plane or expansion joint. No patching at expansion joints will be permitted.

Adhesives shall not be used in place of dowels.

Sidewalk patterns shall be constructed as listed below unless written permission from the Engineer has been given to modify said patterns.

1. Residential pattern shall be used for property zoned R-1, R-2, R-3, R-4, R-P, T-P, and P.

2. Commercial pattern shall be used for all property zoned commercial including C-1 through C-6, C-P and C-M zones.

3. Commercial pattern shall be used for all property zoned industrial unless otherwise released from constructing sidewalks as provided in the Fresno municipal Code.

4. Sidewalks are not required in the M-2, M-3, R-1A, R-1AH and the R-A zones except on major Streets.

5. Sidewalk patterns may be modified by the Engineer, if in his opinion the need for a full commercial pattern is necessary because of extensive pedestrian uses such as on major Streets or in locations near schools, or, if in his opinion, a residential pattern is necessary to be consistent with adjoining property and neighborhoods to maintain compatible uses and pleasing aesthetics.

6. The Engineer may approve a combination curb, gutter and sidewalk, poured monolithic and not less than 6 feet wide in residential areas, on large parcels with no access for vehicles and when there is at least 8 feet of required landscaping adjacent to the sidewalk area.

7. Commercial sidewalk pattern shall be constructed from back of curb to property line and may be poured monolithic with the curb and gutter with the following exception:

   Commercial sidewalk pattern may be reduced in width one foot for each one and one/half foot of landscaping (not required landscaping) provided on

private property (minimum = 3 feet) adjacent to the sidewalk area, but in no event shall the sidewalk be less than 8 feet in width.

Residential sidewalk pattern shall be a minimum of 4 feet wide and with a planting strip between the back of curb and sidewalk of varying width in accordance with the designated sidewalk width. (See City Standard Drawings.)

Planter strips shall be filled with clean top soil level with the top of curb and sidewalk-and only grass or low growing ground covers may be planted therein, with the following exception:

Paving brick or paving tile may be placed between the sidewalk and curb.

The installation of exposed aggregate concrete, gravel, wooden dividers and asphalt paving within the sidewalk area is prohibited.

If paving brick or paving tile is approved for use in the planter strip, it shall be imbedded over three (3) Inches of Portland Cement Concrete, and shall have a surface which is sufficiently abrasive to ensure pedestrian safety and convenience. City approval will be limited to the use of brick or tile with standard colors, standard shapes and sizes, to enable future repair and replacement in kind. Applicants shall furnish the City Department of Public Works a sample of the proposed brick or tile for consideration, approval or disapproval. Cement mortar shall consist of 2 parts of washed masonry sand, free of-organic material, mixed with 1 part of Portland cement, regular or plastic. About ¼ part of lime or fire clay may be added, if desired, to improve workability of the plastic mortar.

All commercial sidewalks shall have provision for trees by the construction of tree wells in accordance with the standard details unless waived by the Engineer in writing.

14-5 DRIVEWAYS

No driveway approach shall be smaller than 9 feet (12 feet on new construction) or wider than 35 feet measured at the property line. Driveways shall not be closer than 3 feet to the outer most portion of Street fixtures (i.e. fire hydrants, electroliers) or to an adjacent property line. Driveways shall be a minimum of 8 feet from a Street property line. Not greater than 60% of any frontage shall be constructed with driveway openings measured along the property line.

14-6 FINISH

Curbs – Trowel smooth and finish with a light brush.

Sidewalks – Medium sweat finish.

Gutters & Valley Gutters – Finish with a medium broom or rubber float.

Driveway Approaches – Finish with a medium broom or rubber float, except wings shall be finished with a light broom.

14-7 CURING

An approved curing compound shall be applied on all surfaces in accordance with Section 90, “Concrete,” of the State Standard Specifications. The cost of curing the compound shall be included in the various bid items.

14-8 BACKFILLING

After removal of forms, the area between the sidewalk and curb shall be cleaned of all surplus concrete and other debris and the area filled with clean earth suitable for planting. No Street Work shall start before backfill is placed behind all curbs.

The Contractor shall repair all excavations for gutters and shall backfill and pave with similar surfacing material thoroughly tamped into place and leveled off to meet the existing Street surface and the gutter.

If more than 2" cut or fill is required, the Contractor shall construct a slope not steeper than 10:1.

14-9 PROTECTING CONCRETE

Construction of concrete subject to rain or freezing weather conditions shall be constructed in accordance with Section 90 of the State Standard Specifications.

14-10 ROCK POCKETS

Immediately upon stripping curb forms and prior to backfill all rock pockets or honeycombs shall be repaired to the satisfaction of the Engineer.

14-11 CLEANING UP

During the progress of the Work as may be directed by the Engineer and before acceptance and final payment, the Contractor shall remove all surplus earth and other surplus material from the Site of the Work and then complete the cleanup by sweeping or washing the Street or Work area and leave the whole in a neat and finished condition within two weeks after the concrete Work has been completed.

14-12 PAYMENT

Payments shall be as specified in the project Specifications.

SECTION 15 – TRAFFIC DIVIDER ISLANDS

15-1 GENERAL

Traffic divider islands shall be constructed in accordance with the Plans and Specifications.

15-2 CONSTRUCTION

Traffic divider islands shall be surfaced with three and a half (3 ½) inches of Portland Cement concrete where the distance measured between the outer top face of curb are eight (8) feet or less. Where the distance between the outer top face of curb exceeds eight (8) feet, the area may be landscaped and will require the following special treatment:

1. All asphaltic materials underlying this area shall be removed.

2. The area shall be filled to within two (2) inches of the top of curb and for a depth of 12 inches with clean excavated soil for which the Contractor shall obtain approval from the City of Fresno Parks Services prior to using.

3. All area inside of the traffic divider island shall be compacted to a relative compaction of 90% as determined by ASTM 1557.

4. When installing stamped concrete in the City of Fresno, the median color shall be Davis red and shall be installed per the Manufacturer's recommendations. The color shall be uniform throughout. The color and process for the stamped concrete shall be more fully described in the Special Conditions of the Specifications for Capital Projects. The stamp pattern shall be 12" slate. When installing stamped concrete in the downtown area, consult the Engineer for color and pattern.

15-3 PAYMENT

Payments shall be as specified in the project Technical Specifications.

SECTION 16 – TRENCHING AND TRENCH RESURFACING

16-1 GENERAL

Excavation, backfilling and trench resurfacing shall be done in a manner such that both pedestrian and vehicular traffic are inconvenienced as little as possible.

16-2 MATERIALS

Pavement sections and all excavated backfill shall conform to the requirements on Standard Drawing No. P-48 of the City Standard Drawings.

Concrete shall be of the class as shown on Plans and shall conform to the requirements of Section 90 of the State Standard Specifications.

Asphalt concrete for surfacing will be Type A and shall be manufactured and placed in accordance with the relevant provisions of Section 39 of the State Standard Specifications using ¾ inch maximum medium size aggregate.

Aggregate base shall be furnished and placed in accordance with Section 26 of the State Standard Specifications for Class 2 Aggregate Base using 3/4-inch maximum size aggregate.

Paint binder and fog seal as specified by the Engineer shall be furnished and applied in accordance with Sections 39 and 94 of the State Standard Specifications.

16-3 TRENCHING

Excavation for pipe shall be in open cut except as indicated and shall include the removal of all materials or objects of any nature that would interfere with the execution of the Work. The trench shall be braced and drained when necessary so that workers may work therein safely and efficiently.

The safety regulations as set forth in the State of California "Construction Safety Orders," Trench Construction Safety Orders, issued by the Division of Industrial Safety, shall be complied with in all Work.

The location of subsurface obstructions found in the field may necessitate a variance in the depth of the pipe, which depth shall be determined in the field by the Engineer. Where underground or surface structures are shown on the Plans, the location, depth and dimensions of such structures and Utility lines are believed to be reasonably correct but are not guaranteed. Such structures are shown for the information of the Contractor, but information so given is not to be construed as a representation that such structures will in all cases be found or encountered just where shown, or that they represent all the structures or Utility lines which may be encountered. It shall be the responsibility of the Contractor to locate all substructures whether they are shown on the Plans or not.

The completed trench shall be uniformly graded to a flat bottom conforming to the grade to which the pipe is to be laid. The pipe shall be laid upon sound soil cut true and even so the barrel of the pipe will be in full bearing for its entire length. Any portion of the trench

excavated below the approved grade shall be corrected and brought up to grade with an approved material thoroughly compacted.

Trenches bottoming in hardpan shall be excavated a minimum of four inches below the grade established for the bottom of the pipe and couplings and then backfilled to the pipe grade with select material, thoroughly compacted. No additional payment will be made for such excavation or refill. Where a firm foundation is not encountered due to soft, spongy or other unsuitable material, all of such unsuitable material under the pipe and for a width of at least 1/2 diameter on each side of the pipe shall be removed to a depth as directed by the Engineer and refilled-with pit run gravel as directed by the Engineer.

The Contractor shall be responsible for the location of subsurface obstructions in the field and shall notify the Engineer immediately if changes in pipe grade are required to avoid them.

Material excavated from the trench shall be placed so as to offer the minimum obstructions to traffic. Ditches shall be kept clean or other provisions made for the handling of drainage and/or irrigation water.

The width of the trench at the top of the pipe shall not be greater than 16 inches more than the outside diameter of the barrel of the pipe to be laid therein.

Bell holes are required for all belled pipe and shall be excavated at each location where pipes are to be joined. Bell holes shall be of sufficient and adequate size to permit ease in making the joint and so the bell does not rest on the bottom of the bell hole.

All Work of excavation or backfilling in a public Street shall be done as quickly as possible. Not more than 600 linear feet of trench shall be open ahead of any Sewer, pipe line or conduit in any Street or alley, except that upon written permission of the Engineer such trenches may be opened for a distance of not more than 1,200 linear feet where public traffic will not be seriously inconvenienced. No excavation or trench shall be opened and left open more than twenty-four hours before the installation of the Sewer, pipe line or conduit which is to be placed in said excavation or trench; and the backfilling of said excavation or trench shall be completed within twenty-four hours after the installation of the facility for which the excavation was made, excepting that portion of the trench or excavation to be used for connecting the extension of the installation, provided said portion is adequately barricaded and protected and backfilled the following working day. Excavations or trenches for poured in place concrete pipe may remain open for a period not to exceed seven Days, providing said excavations or trenches are adequately barricaded, fenced, or plated with steel plate of adequate thickness to allow truck traffic and access is provided for abutting property owners and at all Street intersections.

Where an excavation or trench crosses a Street or alley intersection, the excavation and backfilling shall be completed within twenty-four hours, or bridging capable of supporting vehicular truck traffic shall be provided for access across said excavation or trench.

An excavation within a Street or alley for the purpose of boring or jacking pits or for the installation of structures shall be properly barricaded and protected and may be left open for a period of seven Days and then must be backfilled, unless an extension of time is approved by the Engineer in writing.

Within 24 hours after the trench has been backfilled, all Street crossings shall be surfaced with temporary surfacing of 1-1/2 inches of cold mix surfacing mixed in a central plant. Such surfacing shall remain in place and maintained until the permanent surfacing is to be placed.

16-4 TRENCH RESURFACING

Prior to placing aggregate base or concrete, the edges of the trench will be trimmed to a straight line and cleaned of all foreign material.

The aggregate base shall be prepared in conformance with the requirements of Section 26 of the State Standard Specifications. Aggregate base shall be placed, rolled and compacted to 95 percent compaction as determined by ASTM 1557.

Concrete base shall be as required as shown on plans and with 1 inch maximum aggregate, conforming to and placed in accordance with Section 90 of the State Standard Specifications. An addition of calcium chloride up to two percent by weight of the cement may be required in the Special Conditions to be added to the concrete mix. The top surface of the concrete shall be given a rough rake finish while the mix is still workable with the corrugations parallel with the trench.

Contractor shall not complete surface paving until subbase has been inspected and approved. Violation of this paragraph shall be cause for rejection of that portion of paving involved.

The Contractor shall place and maintain all valve and manhole rings and covers at grade during paving operations in accordance with City Standard Drawing Nos. S-2 through S-4 and W-8.

Asphalt concrete surface course shall conform to and be placed in accordance with Section 39 of the State Standard Specifications. The top of the new surfacing shall be flush with a line struck off from two points on the existing road surface, one each side of the trench, to a maximum tolerance of 1/8 inch, plus or minus. A deviation from this maximum allowable tolerance shall be cause for rejection of the surfacing. PG 64-10 asphalt shall be used.

Paint binder shall be furnished and applied in accordance with the provisions of Sections 39 and 94 of the State Standard Specifications. Upon completion of paving, a fog coat of a penetration type emulsion (RSI) is to be applied over the complete length of the new pavement. Prior to the application, the surface to be sealed shall be thoroughly cleaned of all dirt and loose material by sweeping. The rate of application of this material shall not be less than 0.05 gallon per square yard of area.

Before final inspection of the Work, the Contractor shall clean the entire Site of all dirt, aggregate, concrete, asphalt, and other foreign substances. All parts of the Work shall be left in a neat and presentable condition.

The Contractor shall at all times maintain the Work area in such a manner so as not to create a nuisance. The Engineer may require the Contractor to sweep, water or a combination of both, if conditions in his/her judgment so warrant.

16-5 TRENCH COMPACTION

All backfill shall have a relative compaction of 90% to within twenty-four inches (24") of the surface and the top twenty-four inches (24") shall have a relative compaction of 95% as determined by ASTM 1557.

16-6 PAVE BACK REQUIREMENTS FOR CITY STREETS

On City of Fresno streets that have been overlaid or reconstructed within the past five years, the following requirements shall apply:

a. All backfill and resurfacing shall comply with P.W. Dwg. P-48.
b. No open cut trenching shall be allowed without prior City approval.
c. Where practical, boring of all new services shall be required.
d. For all bell holes, potholes and approved trenching, the final lift of pavement shall extend a minimum of one lane width wide for the length of the trench or excavation but in no case shall the pave n\back be less than 12 feet in length.
e. All resurfacing with 7” pave back shall be done in no less than three lifts with the final lift being no less than 0.20’ in thickness.

16-7 PAYMENT

Payment for trenching shall be included in the unit price of installing the pipe or conduit to be installed in said trench.

Payments for trench resurfacing shall be as specified in the Specifications.

SECTION 17 – SANITARY SEWER PIPE AND APPURTENANCES

17-1 GENERAL

Sewer pipe, manholes, stub-outs, house branches, and service laterals shall be furnished in accordance with the requirements established in these City Standard Specifications. Also included is the testing and internal inspection of all Sewer lines.

No public Sewer may be smaller than eight inches (8") in diameter.

17-2 MATERIALS

Sewer pipe and fittings shall be vitrified clay, unplasticized polyvinyl chloride (PVC), or PVC lined reinforced concrete pipe, as specified herein.

17-2.1 Vitrified Clay Pipe (VCP)

17-2.1.1 General

Vitrified clay Sewer pipe for sanitary Sewers and house connection Sewers shall conform to the following requirements.

17-2.1.2 Manufacturing Requirements

Vitrified clay pipe shall be mechanical compression joint pipe, Band Seal, Wedge Lock, Speed Seal or approved equal. Vitrified clay pipe and fittings shall be extra strength, first quality, sound and well burned throughout their entire thickness and shall comply with the current revisions of ASTM Designation C-700.

17-2.1.3 Installation

Pipe shall be installed in accordance with the current revisions of ASTM Practice C-12.

17-2.1.4 Testing

Pipe shall be in accordance with the current revisions of ASTM Method C-301.

17-2.2 Polyvinyl Chloride (PVC) Pipe

17-2.2.1 General

Polyvinyl Chloride (PVC) sewer pipe for sanitary Sewers, and house connection Sewers shall conform to the following requirements:

Pipe Size (inches)	A.S.T.M.	Min. Wall Thickness
4-15	D 3034	SDR35
18-60	F 679	PS46
18-60	F 1803	PS46

17-2.2.2 Manufacturing Requirements

A. Identification Marks

All pipe, fittings, and couplings shall be clearly marked at intervals not to exceed 5 feet as follows:

1. Normal pipe diameter
2. PVC cell classification
3. Company, plant, shift, ASTM, SDR or pipe stiffness, and date designation

For fittings and couplings, the SDR designation is not required.

B. Cell Classification

PVC pipe shall be made of PVC compound having a cell classification of 12454-B, 13364-A, or 13364-B conforming to ASTM D 1784. The fittings shall be made of PVC compound having a cell classification of 12454-B, 12454-C, or 13343-C. Additives and fillers, including but not limited to stabilizers, antioxidants, lubricants, colorants, etc., shall not exceed 10 parts by weight per 100 of PVC resin in the compound.

17-2.2.3 Jointing Systems

A. General

All pipe shall have a home mark on the spigot end to indicate proper penetration when the joint is made. The socket and spigot configurations for the fittings and couplings shall be compatible to those used for the pipe.

B. Elastomeric Gasket Joins

Pipe shall be manufactured with a socket configuration which will prevent improper installation of the gasket and will ensure that the gasket remains in place during the joining operation.

PVC pipe shall be joined with rubber gaskets. Rubber gaskets shall be manufactured from a synthetic elastomer and shall comply in all respects with the physical requirements specified in ASTM F 477. The compound shall contain not less than 50% by volume of first-grade rubber. The remainder of the compound shall consist of pulverized fillers free of rubber substitutes, reclaimed rubber, and deleterious substances. The Contractor shall retest within 60 Days prior to installation, any pipe gasket that is more than 180 Days old from the

date of manufacture to ensure compliance with the requirements of the Specifications.

The Contractor shall not install any pipe gasket that is more than 2 years old from the date of manufacture.

Gaskets shall be extruded or molded and cured in such a manner as to be dense, homogenous and of smooth surface, free of pitting, blisters, porosity and other imperfections. The tolerance for any diameter measured at any cross section shall be ± 1/32 inch.

When required by the Engineer, the Contractor shall furnish test samples of gaskets from each batch used in the Work. Gasket material shall meet the following requirements:

Property	**Value**	**ASTM Test Method**
Tensile strength, psi min.	1500	D 412
Elongation at break (% min.)	350	D 412
Shore durometer, Type A (Pipe manufacturer shall select value suitable for type of joint)	40 to 65'	D 2240
Compression set (constant deflection) max. % of original deflection	16	D 395 Method B
Tensile strength after oven aging (96 hours, 158°F) % of tensile strength before aging	80	D 573
Increase in shore durometer hardness after over aging. Maximum increase over original Shore durometer	10	D 2240
Physical requirements after exposure to ozone concentration (150 pphm. 72 hours, 104°F, 20% strain)	No Cracks	D 1149

No more than one splice will be permitted in a gasket. A splice shall be made by applying a suitable cement to the ends and vulcanizing the splice in a full mold. The splice shall show no separation when subjected to the following tests:

1. Elongation Test

The part of the gasket which includes the splice shall withstand 100 percent elongation with no visible separation of the splice. While in the stretched position, the gasket shall be rotated in the spliced area minimum of 180° in each direction in order to inspect for separation.

Bend Test

The portion of the unstretched gasket containing the splice shall be wrapped a minimum of 180° and maximum of 270° around a rod of a diameter equal to the cross section diameter of the gasket. Solvent cements are not allowed for joining pipe.

17-2.2.4 Test Requirements

A. General

Pipe, fittings, and couplings shall meet the requirements of the section titled "Requirements" of ASTM, D 3034, F 679 (PS46), F 1803. During production of the pipe, the manufacture shall perform the specified tests for each pipe marking. A certification by the manufacturer indicating compliance with the specification requirements shall be delivered with the pipe. The certification shall include the test result data. The PVC compound shall also meet the chemical resistance requirements of 17-2.2.4 D.

B. Acceptance

The basis for acceptance will be the inspection of pipe, fittings, and couplings; the tests specified in subsection 17-2.2.4A; and compliance with the Specifications. When the pipe is delivered to the work site, the Engineer may require additional testing to determine conformance with the requirements of pipe flattening, impact resistance, pipe stiffness, and extrusion quality. Installation time shall conform to subsection 17-2.2.4 E.

Sodium Hypochlorite	1%
Soap	0.1%
Detergent (Linear alkyl benzyl sulfonate or LAS)	0.1%
Bacteriological	BOD not less than 700 ppm

[1] Volumetric percentages of concentrated reagents of C.P. grade. Weight change specimens shall be 2 inches in diameter and may be molded discs or discs cut from the pipe wall. They shall be conditioned in a mechanical convection oven for 7 Days at 110°F± 4°F, then cooled in a desiccator for 3 hours at 73°± 4°F, weighed, and then immersed in the above solutions. At 28-Day intervals selected specimens shall be removed, washed, surface dried and weighed. These same specimens shall be reconditioned in a mechanical convection oven for 7 Days at 110°± 4°F, then cooled in a desiccator for 3 hours at 73°F± 4°F and weighed again. If any specimen fails to meet these requirements at any time, the material will be rejected.

C. Installation Time Limit

The Contractor shall retest within 60 Days prior to the installation of all pipe and fittings that are more than 180 Days old from the date of manufacture to ensure compliance with the requirements of the Specifications. The Contractor shall not install any pipe that is more than 2 years old from the date of manufacture.

17-2.3 PVC – Lined Reinforced Concrete Pipe

17-2.3.1 General

These Specifications shall apply to reinforced concrete pipe manufactured with a plastic lining for use in sanitary Sewers.

All reinforced concrete pipe used for sanitary Sewers shall be 360° PVC T-lock lined.

The size, type, and D-load of the concrete pipe to be furnished shall be as shown on the Plans, or as specified under the item of Work for the project of which the pipe is a part and shall be for pipe installed by open-cut method of construction.

17-2.3.2 Manufacturing Requirements

Reinforced concrete pipe shall be manufactured and tested in conformance with the requirements of ASTM C-76 or C-655, except as modified herein and to the "D" load, class and size as shown on the Plans with the following addition:

The joints shall be O-ring rubber gasket type, the gasket will be enclosed on all four surfaces in an annular space formed by shoulders on the bell end spigot or in a groove on the spigot. The pipe shall be self-centering and the gasket or gaskets shall not be required to support the weight of the pipe.

Portland cement shall comply with ASTM C-150, Type II, low alkali.

17-2.4 Ductile Iron Pipe

Sewer pipe of ductile iron shall comply with ASTM A746 (Standard Specification for Ductile Iron Gravity Sewer Pipe) and shall be used only in special locations shown on the Plans or as specified in the Special Conditions.

17-2.5 Prohibited Pipe Material

The following pipe materials are not allowed for use in the construction of sanitary Sewers:

1. Asbestos Cement Pipe

2. High Density Polyethylene

3. (HDPE) High Density Polyethylene Plastic Pipe

4. (PE) Polyethylene Solid Wall Pipe

5. Concrete Truss Pipe

6. Cement or Mortar Lined Ductile Iron Pipe

7. Concrete Pipe (unlined or nonreinforced)

17-3 TRENCH AND STRUCTURE EXCAVATION, AND BACKFILL

17-3.1 General

This Work shall consist of all excavation and backfill necessary for the construction of pipelines, structures and other facilities, and the restoration of surfaces disturbed by such Work, all as set forth in the Plans and Specifications and as directed by the Engineer.

Excavations for appurtenance structures, such as manholes, transition structures, junction structures, vaults, etc., shall be deemed to be in the category of trench excavation.

17-3.2 Trench and Structure Excavation

Excavations shall be made to the depths and widths required accommodating construction of conduits and structures to specified dimensions and to the lines and grades indicated on the Plans. Unless otherwise indicated on the Plans, excavations for pipe construction may be open cut.

The Contractor shall be responsible for locating and protecting subsurface obstructions in the field, and shall notify the Engineer immediately if conflicts occur. Reference is made to Section 5, “UTILITIES,” of these City Standard Specifications relative to existing Utilities, and the protection thereof. The location of subsurface obstructions found in the field may necessitate a variance in the depth or alignment of proposed facilities.

The Contractor shall perform all excavations in accordance with the Trench Construction Safety Orders issued by the Division of Industrial Safety of the Department of Industrial Relations of the State of California.

When a trench or structure Site is to be located in an existing oiled earth or pavement area, the existing surfacing to be removed shall be cut by methods approved by the Engineer along neat lines on each side of the trench or around the structure Site. Existing surfacing, when removed, shall be kept separated from the material that is to be returned to the excavation. Failure to comply with this requirement shall be grounds for rejection of the contained material for use as backfill.

Material excavated from the trench shall be placed so as to offer minimum obstructions to traffic.

All existing gas pipes, water pipes, conduits, Sewers, drains, fire hydrants, and other structures which are not, in the opinion of the Engineer, required to be changed in location shall be carefully supported and protected from injury by the Contractor; and in case of injury, they shall be restored by him/her, without additional compensation, to as good a condition as that in which they were found.

The Contractor shall provide, without additional compensation, suitable temporary channels for the water that may flow along or across the site of the Work when necessary.

If all excavated material cannot be stored on the Roadway in such a manner as to maintain access to property along side of the Work, the surplus material shall be removed from the Work and stored until needed for backfill at which time it shall be brought back. If the surplus material is to be stored on other than private property, prior approval must be obtained from the Engineer for the site to be used. The cost of removing and returning material shall be at the Contractor's expense.

17-3.2.1 Trench Widths

Trenches shall conform to the dimensions in Table 17-3.1, unless otherwise specified in the Special Provision, indicated on the Plans, and as may be approved by the Engineer.

TABLE 17-3.1		
TRENCH WIDTHS		
Size of Pipe (I.D.)	**Maximum Width at Top of Pipe Greater Than O.D. of Barrel**	**Minimum Width at Springline Each Side of Pipe**
Less than 18"	24"	6"
18" to 24" inclusive	30"	8"
27" to 39" inclusive	36"	9"
42" to 60" inclusive	Pipe O.D.	12"
Over 60"	requires design by the Project Civil Engineer	

The width of the trench shall not be greater than the maximum indicated in Table 17-3.1, at and below the level of the top of the pipe. The width of the trench above that level may be as wide as necessary for sheeting and bracing, and for proper installation of the Work.

If the maximum trench width as specified in Table 17-3.1 is exceeded at the top of the pipe the Contractor shall provide, at no additional cost to the City, the necessary additional load bearing capacity by means of bedding, having a higher bedding factor than that specified, higher strength pipe, a concrete cradle, cap or encasement, or by other means approved in writing by the Engineer.

17-3.2.2 Trench Grade

Alignment and elevation stakes shall be furnished to the Contractor at set intervals and agreed upon offsets. Where elevation stakes are furnished, the Engineer will also furnish the Contractor with cut sheets.

For all pipe 12 inches or greater in diameter, the Contractor shall excavate for and provide an initial granular bedding at least 4 inches thick or 1/12 the O.D. of the pipe whichever is greater. This bedding material shall be placed at a uniform density with minimum compaction and fine graded as specified below.

Bell or coupling holes shall be dug after the trench bottom has been graded. Such holes shall be of sufficient width to provide ample room for caulking, banding, or bolting. Holes shall be excavated only as necessary to permit accurate work in the making of the joints and to ensure that the pipe will rest upon the prepared bottom of the trench, and not be supported by any portion of the joint.

Depressions for joints, other than bell-and-spigot, shall be made in accordance with the recommendations of the joint manufacturer for the particular joint used.

17-3.2.3 Fine Grading

Unless otherwise specified in the plans and/or special provisions, the bottom of the trench shall be accurately graded to provide uniform bearing and support for each section of the pipe at every point along its entire length, except for portions of the pipe where it is necessary to excavate for bells and for proper sealing of the pipe joints.

17-3.2.4 Over-Excavation

Except at locations where excavation of rock, hardpan, or other unsuitable material from the bottom of the trench is required, care shall be taken not to excavate below the depth indicated.

Unauthorized excavation below the specified grade line shall be refilled at the Contractor's expense with an approved granular material compacted to a uniform density of not less than 95 percent of the maximum density as determined by ASTM D-1557 and D-3017.

Whenever rock or hardpan material is encountered in the trench bottom, it shall be over-excavated to a minimum depth of six inches below the O.D. of the pipe. This over-excavation shall be filled with an approved granular material placed with the minimum possible compaction.

17-3.2.5 Excavation for Manholes, Valves, Inlets, Catch Basins and Other Accessories

Structures shall be over-excavation at least twelve inches (12") beyond dimensions of structures as shown on the Plans. If the native material is such that it will not stand without sloughing or if precast structures are used, the

Contractor shall over-excavate to place the structure and this over-excavation shall be backfilled with the same material required for the adjoining pipe line trench.

17-3.2.6 Pavement and Concrete Cutting and Removal

Where trenches lie within the portland cement concrete section of Streets, alleys, driveways, or sidewalks, etc., such concrete shall be sawcut to neat, vertical true lines in such a manner that the adjoining surface will not be damaged. The minimum depth of cut shall be 1 ½ inches or 1/4 of the thickness, whichever is greater.

No ripping or rooting will be permitted outside limits of cuts. Surfacing material removed shall be hauled from the Site immediately, and will not be permitted in the backfill.

17-3.2.7 Grading and Stockpiling

All grading in the vicinity of trench excavation shall be controlled to prevent surface water from flowing into the trenches. Any water accumulated in the trenches shall be removed by pumping or by other approved methods.

During excavation, material suitable for backfilling shall be piled in an orderly manner, a sufficient distance back from the edges of trenches, to avoid overloading and to prevent slides or cave-ins. Material unsuitable for backfilling, or excess material, shall be hauled from the Site and disposed of by the Contractor.

The Contractor shall, prior to final acceptance of the Work, submit a letter to the City stating the location of each disposal site for all excess or unsuitable material and certify that he has obtained the property owner's permission for the disposal of all such materials.

17-3.2.8 Open Trench

Except where otherwise noted in the special provisions, or approved in writing by the Engineer, trenches shall be excavated only as far in advance of pipe laying as can be backfilled in the same Day. The maximum total length of open trench shall be 600 feet (185 meters), except where approved in writing by the Engineer.

Any excavated area shall be considered open trench until all aggregate subbase material for pavement replacement has been placed and compacted. With the approval of the Engineer, pipe laying may be carried on at more than one separate location, the restrictions on open trench applying to each location. Trenches across Streets shall be completely backfilled as soon as possible after pipe laying.

Substantial steel plates with adequate trench bracing shall be used to bridge across trenches at Street crossings where trench backfill and temporary patches have not been completed during regular work hours. Safe and convenient

passage for pedestrians shall be provided. The Engineer may designate a passage to be provided at any point she/he deems necessary. Access to hospitals, fire stations and fire hydrants must be maintained at all times.

17-4 INSTALLATION OF PIPE

Proper facilities shall be provided for stringing and lowering sections of pipe into the trench. The pipe shall be laid carefully to lines and grades given.

The grade line shown on the Plans indicates the flow line or invert of the pipe and all cuts, unless otherwise indicated, refer to this line.

After the trench for pipe has been brought to the proper line and grade, the pipe shall be laid in the following manner:

Pipe laying shall begin at existing sewer locations and shall proceed upgrade with the bell or groove end of the pipe placed upstream. Each section of pipe shall be laid true to line and grade and in such a manner as to form a watertight, concentric joint with the adjoining pipe. Existing Sewer lines and flow therein shall remain operational at all times. Any rerouting or blockage of Sewer flows during construction by the Contractor, shall require approval by the Engineer.

Sewer pipe and fittings shall be laid and jointed in compliance with the manufacturer's recommendation and shall be carefully adjusted to grade by scraping of filling and tamping the trench bottom. Each joint of pipe must be fully pressed into place so that there will be no unevenness or settlement of one length of pipe with the other at the joint.

Circular reinforced concrete pipe with elliptical reinforcement shall be placed with the minor axis of the reinforcement in a vertical position.

The Contractor shall furnish and use, for grade and alignment control, a laser beam system which complies with OSHA requirements. The laser system shall have good visibility when used with suitable target material. The laser system must be of the self-leveling type so that the laser beam is automatically compensated for minute grade disturbances.

The laser system must also have an early warning system that instantly warns the pipe layer when the laser is off grade. The laser system is to be provided by the Contractor and shall have a minimum accuracy of ±0.01 foot per one hundred feet (100') on line; and a minimum visible range of one thousand feet (1000'). When conditions are such that this method is impractical, such as on short pipe runs, the Contractor shall have an engineer on the ground to set grade of each joint of pipe by means of an engineer's level.

The grade line shown on the Plans indicates the flow line or invert of the pipe and all cuts, unless otherwise indicated, refer to this line.

Each joint of pipe must be fully pressed into place so that there will be no unevenness or settlement of one length of pipe with the other at the joint.

The interior of the pipe shall be kept free from dirt, excess mortar and other foreign material as the laying progresses. Pipe shall not be laid when the condition of the trench or the weather is unsuitable, in the opinion of the Engineer, because of water or mud which may interfere with proper jointing. All open ends of pipe and fittings shall be adequately and securely closed whenever the Work is discontinued. Any pipe which shows undue settlement or is damaged shall be taken up and replaced or re-laid at the Contractor's expense.

All pipe shall be laid to true line and grade. Occasional variations as follows will be permitted: Above grade, 1/4 inch (5mm); below grade, not to exceed 1/2 inch (10mm); alignment not to exceed 2 inches (50mm) if gradual and regular over a distance of 20 feet (6m).

17-5 FOUNDATION, BEDDING, BACKFILLING AND COMPACTION OF TRENCHES

17-5.1 Foundation and Bedding

The material upon which the conduit or structure is to be placed shall be accurately finished to the grade or dimensions shown on the Plans or as directed by the Engineer.
The bottom portion of the trench shall be brought to grade so that the conduit or structure will be continuously in contact with the material on which it is being placed.

Trenches bottoming in hardpan shall be excavated a minimum of 6 inches (150mm) below the grade established for the bottom of the pipe and any couplings and then backfilled to the pipe grade with select material, thoroughly compacted. No additional payment will be made for such over-excavation and refill.

Whenever the bottom of the trench is soft, yielding or unsuitable as a foundation for the pipe, such material shall be removed to a minimum of 12 inches (300mm), or to a depth determined by the Engineer, below the bottom of the pipe or structure, and for a width equal to at least ½ diameter on each side of the pipe, and the space backfilled with sufficient clean granular material of the type directed by the Engineer to ensure a proper foundation. No additional payment will be made for over-excavation or placement of clean foundation material unless so indicated in the Specifications or approved by the Engineer.

The maximum width of the trench at the top of the pipe shall not be greater than that specified in Table 17-3.1, unless otherwise specified on the approved Plans or Specifications for the Project.

Trenches shall be excavated to the depths required for the foundation of Sewer pipes and their appurtenances shown on Plans and where conditions make it necessary to such depths as may be directed by the Engineer. The bottom of the trench shall be excavated or backfilled so that the barrel of the pipe shall have uniform bearing for its entire length, except for the area necessary for bell holes. All adjustment of pipe to line and grade must be made by scraping away or filling and tamping. The use of blocks as support is forbidden. An additional depth and width shall be hand dug at joint or bell locations of sufficient depth to relieve the bell of any load and to allow ample space for making the joint.

Where the pipe is to be laid on sand having less than optimum moisture, as determined by the Engineer, the Contractor shall apply sufficient water and compact the sand prior to placing the pipe.

17-5.2 Pipe Embedment Zone

Pipe Embedment Zone shall be defined as that material supporting, surrounding, and extending to 12 inched (0.3m) above the top of the pipe. Material used for backfilling within the Pipe Embedment Zone shall consist of the following select natural material or processed product Class II or Class III material as defined herein and shall be compacted to a minimum 90% as determined by ASTM D1557 (latest editions).

Class II: (E'= 3000 psi)* Washed concrete sand conforming to Section 90 1.02C(4)c of the State Standard Specifications.

Class III: (E'= 2000 psi)* Select natural sand and coarse silty sand conforming to the following particle size gradation and sand equivalent:

Sieve Size	Percent Passing
3/4 inches (19 mm)	100
4.75mm (#4)	> 50
(#200)	35 Maximum
Sand Equivalent	20 Minimum

* E'= modulus of subgrade reaction

17-5.3 Initial Backfill

Initial backfill shall be the material between the top of the bedding material and 12 inches (0.3mm) above the top of the pipe.

Initial Backfill shall consist of placing and firmly compacting selected granular backfill material under the haunches of the pipe and up to the spring-line of the pipe, and then filling to a level 12 inches (300mm) above the top of pipe.

Initial backfill shall be placed immediately after the pipe has been laid to line and grade in the trench, inspected and passed by the Engineer. The material shall be carefully placed so as not to disturb or damage the pipe or its placement, and shall be brought up evenly on both sides. Initial backfill material shall be backfilled to one foot (1') above the top of the pipe, in layers not to exceed eight inches (8") in depth and tamped by hand or pneumatic tampers to a relative compaction of 90% as determined by ASTM D1557.

The method of compacting and obtaining density requirements for all pipe trenches shall be such that the backfill material shall be completely compacted around the lower haunches of the pipe, such that line and grade of the pipe is not disturbed, and the pipe is not damaged.

Where the City's water system is utilized for construction water, the Contractor shall obtain a water meter from the Water Division (fire hydrant meter are required for all users). The Contractor shall obtain the permission of the Water Division Engineer as to which hydrants are to be utilized. Jetting and Flooding of trenches from the top is not permitted.

17-5.4 Final Backfill

Final Backfill shall be the material above the Initial Backfill and consist of sound earthen material which is free of all rocks, hardpan, paving material, organic matter, broken concrete, wood or other deleterious material. Unless otherwise specified, this may be selected native material with no piece larger than 2 inches (50mm).

Backfilling of trenches shall be accomplished and constructed per City Standard Drawing No. S-10 with the type of replacement noted on the plans or in the Specifications. Surface restoration shall be accomplished and constructed per City Standard Drawing No. P-48.

Backfilling of trenches above the initial backfill as indicated in Section 17-5.3, above, shall be as follows:

> Where mechanical compaction is used, the moisture content shall be such that the specified compaction can be obtained and the backfill shall be placed in lifts the height of which shall not exceed that which can be effectively compacted depending on the type of material, type of equipment and methods used, and under no circumstances shall exceed 4 feet.

All backfill shall have a relative compaction of 90% to within twenty-four inches (24") of the surface and the top twenty-four inches (24") shall have a relative compaction of 95%. Test Method ASTM D 1557 shall be used to determine relative compaction, using the dry random sampling method (dry weight basis).

No free water will be allowed in the top twenty-four inches (24") of backfill.

Backfill, around Utilities that are exposed during trench excavation, shall be placed in accordance with the above bedding, backfill, and compaction methods.

17-6 CONNECTION OF SERVICE LATERALS (HOUSE BRANCHES)

Service laterals shall be furnished and installed by the Contractor at the locations shown on the Plans. Installation shall conform to the requirements Subsection 17-2, "Materials," of these City Standard Specifications, and shall be installed in accordance with Standard Drawing No. S-1, S-8 and S-9 of the City Standard Drawings.

The Contractor shall place as many "Y" or "T" branches of the size designated as directed. The "Y" or "T" branches, unless otherwise specified, shall be inclined at any angle not greater than 45° from the horizontal.

"T" branches are not allowed on Sewer mains six inches (6") to ten inches (10") in diameter.

Each "Y" branch, or the end of the Sewer which does not terminate in a manhole, shall be closed at the bell with a cap made for that purpose. “Y” branches must join the Sewer main with flow in the same direction.

17-7 INSTALLATION OF SEWER HOUSE BRANCHES

Sewer House Branches shall be constructed in accordance with Standard Drawing Nos. S-1, S-8 and S-9 of the City Standard Drawings. Sewer House Branch must connect to Sewer main at least five feet (5') away from the outside edge of a manhole.

Sewer House Branches 4 inches (100mm) and 6 inches (150mm) in diameter may be connected to all Sewer mains less than 18 inches (460mm) in diameter at prefabricated wye or Tee fittings conforming to City Standard Drawing S-8 and S-9. Sewer House Branches 4 inches (100mm) and 6 inches (150mm) in diameter may also be connected directly to existing Sewer mains 18 inches (460mm) to 27 inches (685mm) in diameter, provided that a machine core is utilized to connect to the main Sewer. Direct connection to mains larger than 27 inches (685mm) in diameter shall only be approved in special cases where approved by the Engineer. Connection to these Sewer mains by means other than a machine core will not be allowed. House Branch Sewers 8” (200mm) in diameter or greater connecting to Sewer mains shall require the construction of a manhole at the point of connection.

House branches shall be constructed at locations shown on the Plans or as may be directed by the Engineer and shall extend from the outlet of the "Y" or “T” branch at the Sewer main to the right-of-way line of the Street or alley, where the house branch shall be promptly closed at the bell end with a plug manufactured for that purpose.

The slope and general arrangements of the house branches shall be as shown on the Plans.

Plugs used to seal the ends of house branches shall be of a type approved by the manufacturer of the pipe.

Excavations for laying house branches shall be made in such a manner that at no time will the Street be closed to traffic. Whenever house branches are to be installed in major Streets that have been resurfaced within the last five (5) years, or in pavement that is in good condition and free of cracking, they shall be installed by boring methods rather than open cuts trenches.

Where curb and gutter exists, or is to be constructed concurrently with Sewer facilities, the location of each Sewer service shall be permanently indicated by inscribing the letter "S" two inches (2") in height in the curb directly above the line when the service is perpendicular to the Street centerline. Otherwise, the "S" mark for skewed or angling services shall be placed at a right angle to the end of the service. When Sewer services are installed in an existing Street, the curb mark shall be placed at the time the service is installed to assure proper location. In cases where a concrete curb does not exist, the Contractor shall mark the location of the terminus of the house branch by driving a one-half inch (1/2") iron pipe or rod in the end of the trench before backfilling. The pipe or rod shall extend to within six inches (6") of ground surface.

In new subdivisions when the Sewer services are installed before the curb is constructed, it shall be the Contractor's responsibility to establish the exact location of each Sewer service and to furnish this information to the Engineer.

17-8 MANHOLE CONSTRUCTION AND DROP SEWER CONNECTIONS

17-8.1 General

Manholes shall be constructed in accordance with Standard Drawings S-2 through S-4 of the City Standard Drawings and as specified herein or directed by the Engineer.

Manholes shall be complete structures in place and backfilled including the furnishing and placing of all materials involved. Precast concrete pipe manholes shall consist of a poured in place concrete base section, reinforced concrete pipe section(s), cast iron frame and cover and a poured in place concrete collar with paving patch. Invert channels shall be smooth and semicircular in shape conforming to the inside of the adjacent pipe invert, or flow channels may be provided by use of the bottom half of the specified main pipe. The floor and wall of the manhole outside the channels shall be smooth and shall slope minimum 1:12 towards the channels.

The top of the manhole base section shall be keyed to receive the tongue end of the riser section. The key shall be formed in the freshly poured concrete by using a template manufactured to the dimensions of the riser section. If the riser is cast in-place monolithically with the base section by using a slip form or other means, the key may be omitted between the base and riser. If the base and riser sections are not poured monolithically, but separately, a key shall be provided in the base section. In either case, a key will be required in the top of the riser section to receive the tongue end of the tapered cone.

The joints between the base and all precast elements of the manhole, including adjustment rings and manhole frame, shall be filled with cement mortar, or approved equal, prior to joining the elements.

The interior of the manhole shall be troweled smooth with a wooden trowel, removing excess mortar extruded out of joints for the entire height of the manhole, from the manhole frame to the floor. All excess mortar and any other debris shall be removed from the manhole.

17-8.2 Design and Spacing

Sewer lines shall be laid straight between manholes, unless otherwise specified in the Plans and/or Specifications. The installation of lamp holes or clean-outs on public Sewer mains is forbidden.

Manholes are to be installed at the end of each line; at all changes in grade, size, or alignment; at all intersections; and at distances not greater than 600 feet.

A grade drop of 0.1 foot (30mm) min. shall be provided through manholes, when grade permits.

Manholes shall not be installed in flow channels of gutters, or in depressions subject to storm waters or other infiltration, sidewalks, roundabouts, brick crosswalks or have any brick surrounding the manhole cover.

Flat-top manholes are not permitted. Minimum depth of manhole above the manholes base shall be 42 inches (1.08 m).

17-8.3 Materials

Pre-cast concrete pipe manholes shall consist of a poured in-place concrete base section, reinforced-concrete pipe section(s), a reinforced concrete taper section, grade rings and cast-iron frame and cover. Precast sections shall be manufactured in conformity to ASTM Designation: C-478-(Latest Revision) for their respective diameters.

Elliptical single-line reinforcement will not be permitted. Single line circular reinforcement will be permitted and the minimum steel area shall equal the minimum steel area required for the inter-cage reinforcement.

Tapered sections shall conform to the requirements for pipe of the size equal to the largest internal diameter of the tapered sections.

Concrete for the base section shall be 6 sack. Precast manhole bases are not allowed.

Unless specified otherwise, manholes on sewer mains 12 inches in diameter or larger, or on any size sewer mains within 600 feet of and connected to sewer mains 30 inches in diameter or larger shall be lined with T-lock or coated with one of the following: Raven 400 or Raven 405, products of RLS solutions; Neopoxy 5300 series, products of Neopoxy International; or Quadex Structure Guard, a product of Quadex. Approved products shall be applied per manufacturer specifications. No substitutions are acceptable.

17-8.4 Installation

The inside of the manhole shall be formed to the flow line of the Sewer. The formed flow channel depth shall extend above spring line up to half of the pipe. The bench shall slope a minimum 1:12.

Changes in direction of flow shall be made with a smooth curve of as large a radius as the size of the manhole will permit. Changes in grade of the channels shall be made gradually and evenly. Where the pipe size of the entering and leaving pipe is different, the larger diameter must be maintained in the manhole.

A channel shall be formed in the bottom of all new starting manholes (a terminal manhole at the upstream end of a sewer main) and it shall extend completely through the manhole. The upstream end of the new flow channel shall terminate at the manhole wall, and the end of the flow channel shall be vertical with no fillet between the flow channel bottom and the manhole wall.

Stub-outs shall be installed in manholes at the locations and sizes shown on the Plans. All stub-outs shall be sealed with a plug of a type approved by the manufacturer of the pipe. When connecting to the existing stub-outs and the plug is removed, a new square cut shall be done to the existing stub-out prior to connection on the new sewer main.

All manholes shall be completed to finish grade with concrete collar and paving patches (where indicated) as shown on the City Standard Drawings and as herein specified. In undeveloped areas where no Street or alley surfacing is to be done in conjunction with or immediately after Utility installation, the manhole cover shall be finished off to a level 1 inch (25mm) above ground elevation and shall be provided with 12 inches (300mm) of grade rings. In existing Street areas where surfacing exists and no new Street regrading is contemplated in conjunction with or immediately after Utility installation, such as new subdivisions, manholes shall initially terminate with the top of the cone 6 inches (150mm) below subgrade and shall be brought to Street or alley surface with grade adjustment rings and completed after Street paving is accomplished. Unless specifically otherwise indicated in the Specifications, it will be the responsibility of the Sewer Contractor to return and install the manhole covers to finish grade as specified and shown on the City Standard Drawings.

The Contractor is aware that connections to existing Sewers will be “wet” and the Contractor shall make whatever arrangements are necessary to complete the manhole connections under the “wet” conditions.

Where necessary, manholes shall be equipped with an approved water-tight insert placed under the manhole cover to prevent rainwater or other inflow.

No steps shall be installed in manholes unless otherwise noted on the Plans.

17-8.5 Abandon and Removal

Manholes abandoned in place shall be broken out within 2 inches (0.6m) of the finished grade.

The manhole frame and cover will be delivered to the City Corporation Yard. The Sewer mains entering the manholes shall be sealed with concrete and the manhole backfilled with sandy soil and compacted to a relative compaction of 90% using optimum moisture and tested in accordance with ASTM D1557.

Manholes to be removed shall have the base removed with the barrel and taper. The manhole frame and cover will be delivered to the City Corporation Yard. After the complete manhole has been removed the excavation will be backfilled in accordance with backfill requirements. Before backfilling, all Sewer pipes that have entered the manhole will be sealed with concrete.

17-8.6 Adjustments

Where existing manholes need to be raised or lowered to meet a new Street grade, they will be left in place and marked until the Street has been paved. After the paving material has been compacted they will be dug out and the ring and cover removed and lowered or raised to grade by use of concrete around the frame but left two (2) inches below the-finished surface in asphalt concrete Streets and the top two inches filled with A.C. and rolled. In concrete surfaced Streets the concrete will be brought to the surface.

"Jiffy Rings" (manhole adjusting riser rings that feature a turnbuckle linkage pivoted at each end, that provide the ultimate means to expand a manhole riser) for raising manholes will be allowed.

17-8.7 Drop Sewer Connections

Drop Sewer connections at manholes shall be constructed in accordance with City Standard Drawings S-11A and S-11B, and only at locations approved by the Engineer and shown on the approved Plans.

17-8.8 Payment

If existing manholes are to be removed and replaced they shall be included in the bid price of new manholes unless otherwise specified in the Specifications.

The bid price of adjusting manholes to the new Street grade shall include surface restoration.

17-9 FUTURE STUB OUTS

Stubs shall be installed in the manholes at the locations and of the size shown on the Plans. All stubs shall be sealed with a plug of a type approved by the manufacturer of the pipe for use with his/her product. When connecting to the existing stubs and the plug is removed, a new square circumferentially cut shall be done to the existing stub prior to connection on the new sewer main.

17-10 DEFLECTION TEST OF PVC SEWER LINES

PVC Sewer pipe, which is designated as flexible in nature, shall be tested for excessive deflection. This test shall be performed after backfilling and compaction but prior to the placement of aggregate base or asphalt-concrete surfacing, and prior to television inspection as specified in Subsection 17-12, “TELEVISION INSPECTION OF INTERIOR OF INSTALLED PIPE,” of these Specifications.

The Contractor shall demonstrate that the maximum pipe deflection does not exceed 5 percent by pulling a properly sized rigid ball or a mandrel through the main line pipe. A “rubber flush ball” does not meet this requirement for deflection testing.

Failure of the deflection test shall be grounds for rejection of the section tested, until correction of the reason for the failure and successful retesting of the section.

17-11 LEAKAGE TEST OF SEWER LINES AND SERVICE LATERALS

After completing the installation, backfill and compaction of a section of Sewer line with service laterals, and after all other underground Utilities (including gas, electric, telephone, cable television, water and Storm Drain) are in and compacted, but prior to the placement of aggregate base or asphalt-concrete pavement, the Contractor shall, at his/her expense, conduct a leakage test using low pressure air. The test shall be performed using the following procedures and under the Supervision of the inspecting Engineer.

Each section of Sewer between two successive manholes shall be tested by plugging all pipe outlets with suitable test plugs.

All pneumatic plugs shall be seal tested before being used in the actual test installation. One length of pipe shall be laid on the ground and sealed at both ends with the pneumatic plugs to be checked. Air shall be introduced into the plugs to 170 MPa (25 pounds per square inch) gauge pressure. The sealed pipe shall be pressurized to 35 MPa (5 psig). The plugs shall hold against this pressure without bracing and without movement of the plugs out of the pipe.

To commence the leakage test, air shall be slowly added until the internal pressure is raised to 27 MPa (4.0 psig). The compressor used to add air to the pipe shall have a blow-off valve set at 35 MPa (5 psig) to assure that at no time the internal pressure in the pipe exceeds 35 MPa (5 psig). The internal pressure of 27 MPa (4 psig) shall be maintained for at least two minutes to allow the air temperature to stabilize after which the air supply shall be disconnected and the pressure reduced to 24 MPa (3.5 psig). The time in minutes that is required for the internal air pressure to drop from 24 MPa (3.5 psig) to the lower pressure indicated in the appropriate table below shall be measured and the results compared with the values tabulated below.

Gauges used to measure test pressures shall read from 0 MPa (0 psig) to 69 MPa (10 psig) maximum with 3.5 MPa (½ psig) increments. If required, the Contractor shall supply necessary fittings to accept a City supplied gauge.

All gauging and testing shall be done outside the manholes and no one shall be allowed to enter the manholes while the line is pressurized.

PVC Gravity Sewer Pipe

Minimum Acceptable Time Required for Pressure decrease from 24 MPa (3.5 psig) to 20 MPa (3.0 psig):

Pipe Diameter	Test Time (Minutes)	(Seconds)
4” (100 mm)	2	32
6” (150 mm)	3	50
8” (200 mm)	5	6
10” (250 mm)	6	22
12” (300 mm)	7	39
15” (380 mm)	9	30

Vitrified Clay Sewer Pipe
Minimum Acceptable Time Required for Pressure decrease from 3.5 to 2.5 psig:

Pipe Diameter (Inches)	Test Time (Minutes)	(Seconds)	Minimum Distance Between Manholes (Feet)	K Value
4	2	0	430	0.428
6	2	45	380	0.592
8	3	45	320	0.702
10	4	46	260	1.100
12	5	40	215	1.58
15	7	0	170	2.470
18	8	36	145	3.560
21	10	6	125	4.850
24	11	6	105	6.34
27	12	42	95	8.020
30	14	1	85	9.900
33	15	0	75	12.000
36	16	41	70	14.300
39	18	5	65	16.700
42	19	24	60	19.400

The above-tabulated values shall be used for the respective diameter pipes except where the distance between successive manholes is less than the above-tabulated values, in which case, the following formula will be used to determine the test time.

T = KL
T = test time in seconds
K = value from table
L = distance between successive manholes in feet

Failure of the leakage test will be grounds for rejection of the section tested, until discovery and correction of the reason for the failure and successful retesting of the section.

17-12 TELEVISION INSPECTION OF INTERIOR OF INSTALLED PIPE

The Contractor shall furnish closed circuit television inspection for an interior inspection of the newly installed Sewer mains. The television check of the Sewer mains shall be made after leakage and deflection tests have been performed and prior to placing of Street aggregate base or asphalt paving. Any broken pipe, separation of joints, or any pipe exceeding the permitted tolerances for line and grade shall be replaced or repaired.

Any pipe repaired or replaced as a result of television inspection shall be retested for leakage and deflection. An electronic copy of the television inspection (standard DVD or in Mpeg file format) shall be provided the City at no additional cost to the City. The Contractor shall be responsible for all costs associated with furnishing the television inspection and making final repairs to the Sewer mains and reinspection utilizing the closed circuit television equipment.

At the request of the Contractor, the City may at its option perform the closed circuit television inspection or reinspection on the Contractor's installation at a cost designated in the City's Master Fee Resolution for such Television Inspection work.

Requirements for Sewer Video Inspections:

1. The Video Inspection Company is to certify as to their ability to adequately perform the video inspection.

2. The City Inspector will provide 24 hour notice of inspection schedule and will be present to monitor the inspection.

3. A flush truck will be required to be on-site to aid in the video inspection.

4. A DVD shall be submitted to the City as proof of inspection and be certified to comply with Plan requirements or pointing out by station any defects found.

5. Lateral lines to be documented by stationing from center line of manhole and the inspection firm shall provide a map of the inspected lines.

6. In order to facilitate review a log of the inspections performed shall correlate from manholes, stationing, etc., between the Sewer Plans and the DVD produced.

7. Joints- Shall have a perspective view, and have each joint inspected by turning the camera 90 degrees to the joint and inspecting all 360 degrees of the connection.

8. Laterals- Shall have a perspective view identifying clock position to the main and a view into the lateral to identify any rolled gasket in the lateral connection.

9. Sags- A guide shall be used that is 1" in diameter to identify sags and must be visible during the entire inspection. Give a perspective view of the start of the sag, a view of the guide at the deepest part of the sag and the end of the sag.

10. Downstream Access Point- A perspective view of the channel from the mainline at the downstream access point must be shown. Provide a snapshot of the bottom of the channel and the shelves looking downstream.

11. Debris- if debris is found during the inspection, the inspection needs to be terminated and restarted once the debris has been removed and more water dumped into the main.

12. Video Inspection shall be performed in the direction of flow.

13. Liner Job (e.g. Cured in Place Pipe) - The bottom of the pipe needs to be free of water and the camera lens shall have a visible view of the pipe.

17-12 TELEVISION INSPECTION OF INTERIOR OF INSTALLED PIPE (ADDITIONAL INFORMATION)

INSPECTION OF NEW CONSTRUCTION-SEWER INFRASTRUCTURE MAIN SEWER LINES AND MANHOLES

Before new construction of sewer infrastructure (main sewer line, manholes, etc.) is approved by the City, a video of the construction will be reviewed to ensure specific guidelines are followed. If these are not met, the approval is put on hold until the problem is fixed. A follow up video inspection is then required which will be reviewed and approved if in compliance. The video can be done by private contractors while the final review and approval is done by the City.

The City of Fresno is also available to do the video inspection and will charge a fee to recover the cost of the labor and equipment utilized on the video inspection and cleaning of debris if necessary. If using the City's resources, provide billing information and project identification. The costs for utilizing the City's services are as follow:

Television Inspection/Sewer (Master Fee Schedule)

CCTV Inspection, per hour (one hour minimum)	$134.39*
CCTV Standby, per 15-minute period	$ 33.60*
Cleaning of minor debris for inspection, per hour (30 minutes minimum)	$141.09*

*This price is changed periodically in the Master Fee- Schedule update.

Ensuring proper construction of main sewer lines and manholes prevents future maintenance issues that could increase the potential for blockages and possible sanitary sewer overflows.

Guidelines for Inspecting New Construction

• Ensure access area is free of construction debris. Standby charges may apply if work is scheduled and staff is unable to access the area to be inspected.
• Clean mainlines and manholes of all debris prior to inspection.
• After cleaning, water is to be dumped in to the upstream manhole via flusher nozzle or hydrant. If flusher nozzle is used by running it upstream, it needs to be pulled back without pressure to keep water in the line.

CCTV Inspections

- Joints-Need to have a perspective view and have the joint inspected by turning the camera 90 degrees to the joint and inspecting all 360 degrees of the connection.
- Laterals-Need to have a perspective view identifying clock position to the main and a view into the lateral to identify any rolled gasket in the lateral connection.
- Sags-A guide needs to be used that is 1" in diameter to identify sags and should be visible during the entire inspection. Give a perspective view of the start of the sag, a view of the guide at the deepest part of the sag and the end of the sag.
- Downstream Access Point-Give a perspective view of the channel from the mainline at the downstream access point. Make sure to have the bottom of channel and the shelves in the snapshot.
- Debris-If debris is found during the inspection, then, the inspection needs to be terminated and restarted once the debris has been removed and more water dumped into the main.

Manhole Inspections

- A top view snapshot of each manhole.
- A full frame view of the channel work from the top down for each manhole.
- Each snapshot needs to be identified by manhole/station number any inspections submitted that have debris will not be accepted.
- Any joints, laterals, or connections that have not been inspected will not be accepted.
- Any manholes that have not been inspected will not be accepted.
- All media to be provided in DVD formal.

17-13 MEASUREMENT

Measurement for Sewer main installation and service lateral installation shall be by the lineal feet of pipe installed, and shall be actual horizontal length installed, measure through wye fittings.

Measurement for wye or Tee fittings shall be per each wye or Tee fitting installed.

Measurement for manholes shall be per each manhole installed.

17-14 PAYMENT

The unit price bid per lineal foot for Sewer mains shall include full compensation for furnishing all labor, materials, tools, equipment and incidentals and for doing all the Work involved therein as shown on the Plans, as set forth in the Specifications, and as directed by the Engineer. This shall include, but not be limited to, furnishing and installing the pipe, trenching, backfilling, compacting, testing and internal inspection.

The unit price bid per lineal foot for service laterals (house branches) shall include full compensation for furnishing all labor, materials, tools, equipment and incidentals and for doing all the Work involved therein as shown on the Plans, as set forth in the Specifications, and as

directed by the Engineer. This shall include, but not be limited to, furnishing and installing the pipe, trenching, backfilling, compacting, testing.

The unit price bid per each for wye or tee fittings shall include full compensation for furnishing all labor, materials, tools, equipment and incidentals and for doing all the Work involved therein as shown on the Plans, as set forth in the Specifications, and as directed by the Engineer, in excess of the cost of installing the main line pipe and service lateral. This shall include, but not be limited to, furnishing and installing the wye or tee fitting and plug, trenching, backfilling, compacting, testing and internal inspection.

When the contract does not include a pay item for wye fittings as above specified, and unless otherwise provided in the Specifications, full compensation for wye or tee fittings shown on the Plans shall be considered as included in the prices bid for other Sewer pipeline items of Work and no separate payment will be made therefore.

The unit price bid per each for manholes shall include full compensation for furnishing all labor, materials, tools, equipment and incidentals and for doing all the Work involved therein as shown on the Plans, as set forth in the Specifications, and as directed by the Engineer. This shall include, but not be limited to, furnishing and installing the manhole and stub-outs, backfilling and compaction, returning and adjusting manhole lids and frames to final grade following Street or alley construction or reconstruction, and connection to all pipes, wet or otherwise.

No separate pay item will be included in the Proposal, nor direct payment made for trench or structure excavation, backfilling, compaction, or placement of temporary pavement. The cost of these features of the Work shall be included in the unit price bid per linear foot for furnishing and laying pipe or installing structures.

SECTION 18 – GUIDELINES FOR PROPOSED BIKE LANE PROJECTS WITHIN EXISTING STREETS

18-1 GENERAL

Purpose: To provide guidelines to encourage the construction of bike lanes in conformance with the City's General Plan while respecting the privileges of adjoining properties.

The Engineer shall apply these guidelines in conformance with sound traffic engineering principles and the City's General Plan.

The Guidelines are as follows:

1. To the greatest extent possible, bike lanes will be installed adjacent to existing curbs. In cases where curb parking is permitted, bike lanes will be installed between the parking and travel lanes, whenever possible.

2. Consideration will be given to 5-foot bike lanes min. (measured from the face of curb), reduced lane widths, and/or elimination of traffic lanes. A traffic study to investigate traffic speeds, speed limits, type of corridor, volumes of cars and trucks, etc., may be developed before travel lanes are eliminated and/or reduced in width.

3. Street parking needs versus available off-Street parking on adjoining properties shall be reviewed. Street parking may be eliminated under the following conditions:

    a. The adjoining property has been developed with "back-up or side-yard" treatment to permit alternative parking.

    b. The property has sufficient off-site parking on adjoining local Streets.

    c. A residential house has sufficient space for three (3) on-site parking spaces. An on-site parking space can mean a garage, a carport, a paved driveway, concrete ribbons, etc., even if such facilities are used for other purposes. Garages converted to living quarters with an approved building permit, shall not count as available parking.

    d. Major shopping centers, office complexes, and other development with on-site parking lots, have been developed in conformance with the parking standards adopted by Council in the current City of Fresno Municipal Code.

    e. When an adjoining development has sufficient on-site parking, but the space is used for other purposes.

4. For smaller, local shopping centers and office complexes, parking will not be deleted if the Street provides the only means of customer access or the elimination of such Street parking causes a severe hardship on the adjoining development.

5. Where sufficient road width is not available, frontage roads may be used for bike routes. Ingress and egress will be designed to provide maximum safety to the cyclist. The median shall be opened to allow the bicyclists to the frontage road with a 5' wide

by 6" thick P.C.C. riding surface. Frontage roads will be designated Bike Routes with “Bike Route” signs at the beginning of the route.

6. More circuitous, alternate bike routes will be considered as a last resort.

7. Construction of parking bays and the reduction of frontage road islands and median islands, may be considered if the costs are not prohibitive. The aesthetics of median islands must be maintained.

8. Staff will consult with the bicycle clubs and send mailings to adjoining neighbors and/or businesses before Street parking is eliminated. Property owners who object to elimination of parking in front of their properties or disagree with the implementation of these guidelines, may file a written protest to the Engineer. The Engineer will make a final determination (in writing) within 10 Days after receipt of the written protest. Property owners with back-up treatments (rear of property faces proposed Street) will not receive a mailer.

9. At all Street intersections, the bicycle symbol shall be painted at a point 25 feet from the return and every 800 feet (maximum) of continuous bike lane.

10. “Bike Lane” signs shall be installed at the beginning of a bike lane and every ½ mile of continuous bike lane. A “Bike Route” sign shall also be installed where the bike lane changes to a bike route. Bike lane supplementary “Begin” and “End” signs shall not be installed.

11. Major Street bike lane striping shall be a single stripe at locations where the bike lane is adjacent to the curb and two stripes where the bike lane is between the travel way and the parking lane with 13' or wider distance available. The bicycle pavement marker shall be centered in the area where the bicyclists are expected to ride.

12. Bike lane striping shall be applied using thermoplastic paint conforming to State Standard Specifications Section 84-2. Bicycle legend shall be applied using “Legend Build Paint” or approved equal.

13. On extra wide Streets that are not developed with their ultimate lane configuration, the bike lanes will be installed at their ultimate location.

14. Bike lane and bike route signs shall be a minimum of 18" x 24" and shall have an anti-graffiti coating and attached with theft-proof “U” bolts.

15. “No Stopping Anytime” signs will be installed at intervals of 200 feet (or at intervals determined by existing streetlight poles) when striping a curb side bike lane.

16. At a bus stop without a bus bay, the bike lane stripe will be painted through the bus stop.

SECTION 19 – JACKING PIPE

19-1 GENERAL

This Work shall consist of furnishing, boring, and jacking into place the type of pipe shown on the Plans or specified in the Specifications at locations and between the limits shown on the Plans or specified, and in accordance with these City Standard Specifications, the City Standard Drawings and as directed by the Engineer.

19-2 MATERIALS

The casing pipe designed on the Plans shall be of the size and class (or strength designation) shown on the Plans or specified, except that the class of pipe designated has been determined for vertical loads only. Additional facilities, reinforcement, or strength of pipe required to withstand jacking pressure shall be determined and furnished by the Contractor at his/her expense.

Steel casing pipe shall have a wall thickness not less than that shown on the Plans, and shall be butt welded of sheets conforming to ASTM A-570 commercial grade or of plate conforming to ASTM A-283. All field joints also shall be butt welded full circumference or by other means approved by the Engineer. Joints to be field welded shall be shop cut to ensure a true 90E to the longitudinal axis of the pipe. Use of a jacking band to reinforce the end of the pipe receiving the jacking thrust will be required. It shall be the Contractor's responsibility to provide joints that are capable of resisting the jacking stresses without failure.

Carrier pipe to be installed within steel casing shall be as indicated on the Plans and/or Specifications.

Redwood blocks (or other methods approved by the Engineer) for supporting carrier pipe within steel casing shall be construction heart redwood, rough graded in accordance with the current standard specifications for structural grades of California redwood approved by the Board of Review, American Lumber Standards Committee and published by the Redwood Inspection Service. All material shall be well manufactured. Only pieces consisting of sound wood, free from decay or defect, will be accepted in the Work. Redwood blocks shall be v-cut to fit the contour of the pipe.

Concrete for plugs to be placed at ends of casing pipe as shown on the Plans shall be Class 2, in conformance with Section 90-2, "Minor Concrete," of the State Standard Specifications.

19-3 EXCAVATION OF JACKING AND RECEIVING PITS

Excavation of jacking and receiving pits shall be sheathed, shored, sloped or braced in accordance with the Safety Regulations of the State of California, Department of Industrial Relations, Division of Industrial Safety.

19-4 BORING AND JACKING

Pipe shall be jacked in conformity with the prescribed lines and grades obtained from the stakes set by the Engineer. Excavation for the pipe shall be accomplished by boring or by hand digging. Sluicing or jetting with water will not be permitted.

The excavated hole, whether bored or hand dug, shall not be more than 1 inch in diameter greater than the outside limits of the casing. If the nature of the material is such that caving will likely occur and which may result in a greater space than above specified, a metal shield or jacking head shall be installed which extends a minimum of 16 inches ahead of the jacked casing or pipe. The metal shield shall cover a minimum of the upper ½ of the periphery of the jacked casing or pipe. Excavation shall not proceed beyond the shield.

Where ground conditions at the face of the jacking pit are such that sloughing or caving of ground is likely to occur at the face of the excavation upon commencement thereof, the face of the pit shall be made stable so that an excessive void is not carried with the face of the excavation for the length of the casing or pipe. This may be accomplished by solid sheathing at the portal of the jack, or excavating and backfilling the face of the pit with cohesive material.

Cavities or voids outside the limits specified above, regardless of cause, shall be backfilled with sand, soil, cement, or cement mortar as directed by the Engineer. All casing pipe 24 inches or larger, shall be furnished with preinstalled fittings suitable for attachment to grout pumping equipment. Such grout connections, unless otherwise indicated on the Plans, shall be placed at 30E, 120E, 240E, and 330E, measured clockwise, from vertical, around the circumference of the casing or pipe, and at intervals in each row, along the pipe, of no greater than 10 feet. Alternate bottom holes shall be staggered, and alternate top holes shall be staggered, so that one hole will occur at the top every 5 feet and one hole will occur at the bottom every 5 feet.

Immediately after completion of the jacking or boring operation, if in the opinion of the Engineer, excessive voids have been created outside the jacked pipe, lean grout shall be injected through the grout connections in such a manner as to completely fill all voids outside the casing pipe resulting from the jacking or boring operation. The lean grout shall consist of one part Portland cement to not more than 4 parts sand by volume, placed at low pressure. Grout pressure is to be controlled so as to avoid deformation of casing pipe and/or avoid movement of the surrounding soil. Sand for grout to be placed outside the casing shall be of such fineness that 100 percent will pass No. 8 sieve and not less than 35 percent will pass a No. 50 sieve. After completion of grouting, the grout connections shall be closed with cast-iron threaded plugs.

In general, excavated material shall be removed from the casing as jacking progresses and no accumulation of excavated material within the casing will be permitted. Should appreciable loss of ground occur in installations where the face of the excavation is accessible, the voids shall be backpacked promptly to the extent practicable with an approved soil cement.

Where carrier pipe is to be installed within a jacked casing, carrier pipe as shown on the Plans or indicated in the Specifications shall be installed within the casing pipe to the lines and grades shown on the Plans, and as indicated on the City Standard Drawing pertaining thereto. The carrier pipe shall be supported on skids during the installation of the pipe. The skids shall be installed in such a manner as to relieve the couplings from all load and bearing. At the successful completion of the installation, concrete end seals (concrete plugs) shall be installed

in accordance with the City Standard Drawing. Care shall be taken during the placement of these seals that the pipe is not damaged, deflected or displaced.

19-5 GRADE TOLERANCE

Steel casing pipe of the minimum size and thickness specified on the Plans shall be installed in place to grades required to install the carrier pipe at the design grade. The Contractor's attention is called to the fact that extreme care will be required in placing the casing pipe so as to permit the construction of the carrier pipe to the lines and grades as shown on the Plans. It shall be the Contractor's responsibility for selecting a size of casing, at or above the minimum specified, in order that the jacking may be done with a sufficient degree of accuracy to permit installation of the carrier pipe to the grade as shown on the Plans within the tolerances set forth in these City Standard Specifications for the particular carrier pipe installed. Any and all increases costs resulting from the Contractor's use of steel casing with greater diameter or thickness than the minimum specified shall be borne solely by the Contractor. Variations from theoretical alignment and grade of the steel casing at the time of completion of jacking shall not exceed one percent of the distance from the jacking point.

19-6 BACKFILL, COMPACTION AND RESTORATION OF SURFACES FOR JACKING AND RECEIVING PITS

Jacking and receiving pits shall be backfilled and compacted, and the surface restored, in accordance with Section 16, "TRENCHING AND TRENCH RESURFACING," of these City Standard Specifications.

Measurement for steel casing pipe jacked into place shall be by the lineal foot of casing pipe jacked into place as shown on the Plans or directed by the Engineer.

Where carrier pipe is indicated on the Plans to be placed within a jacked casing pipe, carrier pipe will be measured by the lineal of pipe installed.

19-7 PAYMENT

The unit price bid per foot for steel casing, jacked into place, shall include full compensation for furnishing all labor, materials, tools, equipment and incidentals and for doing all the Work involved therein as shown on the Plans, as set forth in the Specifications, and as directed by the Engineer. This shall include, but not be limited to excavating, backfilling and compacting the jacking and receiving pits, boring and tunneling, furnishing and installing the casing complete with grout fittings, furnishing and installing metal shields, furnishing and installing skids and tie downs, grouting and backfill of voids, sealing ends of casing, and all other incidental Work over and above the associated with the normal Work of furnishing and installing the carrier pipe in a trench situation. Carrier pipe to be placed in casing as shown on the Plans will be paid for as normal in-trench pipe as set forth in these Specifications for the particular type of pipe to be installed.

SECTION 20 – STORM DRAINAGE PIPING AND STRUCTURES

20-1 GENERAL

All storm drainage facilities, whether temporary or permanent, shall be installed in accordance with the current FMFCD Standard Specifications and FMFCD Standard Drawings.

Trench excavation and backfill, in all City of Fresno easements and public rights-of-way, shall be constructed in accordance with Section 16 of these City Standard Specifications.

20-2 USE OF PLASTIC PIPE

When utilizing plastic pipe for storm drainage facilities, the Contractor shall comply with the current FMFCD Standard Specifications and FMFCD Standard Drawings except for the following:

a. The pipe size is limited to 24 inches in diameter, and

b. In areas were the hydraulic grade line is above the soffit of the Storm Drain pipe, only watertight joints are allowed and shall comply with Section 61 of the State Standard Specifications.

SECTION 21 – DOMESTIC WATER FACILITIES DESIGN CRITERIA

PART I – INTRODUCTION

21-1 DEFINITIONS

Unless the particular provision or context otherwise requires, the definitions and provisions contained in this Section 21 shall govern the construction, meaning and application of words and phrases used in the conditions in this Section 21. The definition of each word or phrase shall constitute, to the extent applicable, the definition of each word or phrase which is derivative from it, or from which it-is a derivative, as the case may be.

"Compression Joint"
A push-on joint that seals by means of the compression of a rubber ring or gasket between the pipe and a bell or coupling.

"Confined" In areas were the hydraulic grade line is above the soffit of the Storm Drain pipe, only watertight joints are allowed and shall comply with Section 61 of the State Standard Specifications.

"Easement" A recorded document in which the land owner gives the City permanent rights to construct and maintain water mains and/or facilities across private property.

"Health Agency" The State Department of Health Services. For those water systems supplying fewer than 200 Service Connections, the local health officer shall act for the State Department of Health Services.

"House Lateral" A Sewer connecting the building drain and the main Sewer line.

"Mechanical Joint"
A joint comprised of pipe spigot, a follower gland (ring), a mechanical joint gasket and the bell of an adjoining pipe, fitting or valve wherein the joint seal is accomplished by tightening a series of bolts and nuts that compress the gasket against the bell recess and the pipe spigot outside diameter.

"Pressure Class" See definition for "Rated Working Water Pressure," below.

"Rated Working Water Pressure"
A pipe classification system based upon internal working pressure of the fluid in the pipe, type of pipe material, and the thickness of the pipe wall.

"Restrained Joints"
A non-standard or modified push-on or Mechanical Joint that is capable of preventing internal pressures or external forces from causing the joint to separate without the use of thrust blocks.

"Sleeve" A protective tube of steel with a wall thickness of not less than one-fourth inch into which a pipe is inserted.

"Water Supplier" Any Person who owns or operates a public water system.

21-2 OTHER REQUIREMENTS

Ordinances, requirements, and applicable standards of governmental agencies having jurisdiction within the area served by the Water Division shall be observed in the design and construction of water mains and facilities.

Such requirements include, but are not limited to, current revisions of the following:

21-2.1 "Standard Specifications for Public Works Construction," latest edition, including all applicable supplements, prepared and promulgated by the California Chapter of the American Public Works Assn. and the Associated General Contractors of America.

21-2.2 State Health laws and regulations regulating the separation between water supply and sewerage facilities.

21-2.3 State Uniform Plumbing Code as adopted by the City of Fresno.

21-2.4 Road encroachment regulations of the City of Fresno, County, State of California, Fresno Irrigation District, and railroad permits where applicable.

21-2.5 American Water Works Association Standards.

21-2.6 Titles 17 and 24 of the State Health and Safety Code regulating cross connection control and back-flow prevention and Chapter 6 of the City of Fresno Municipal Code, regulating cross connections for the City water system.

PART II – GENERAL PROVISIONS

21-3 OTHER REQUIREMENTS

Ordinances, requirements, and applicable standards of governmental agencies having jurisdiction within the area served by the Water Division shall be observed in the design and construction of water mains and facilities.

Such requirements include, but are not limited to, current revisions of the following:

21-3.1 Scope

The design and construction of water mains, facilities and other appurtenances for the City shall comply with these City Standard Specifications, or permit requirements of various governing bodies, except where specific modifications have been approved by the Engineer, in writing. A tentative plan must be submitted for comment prior to final design. All final Plans submitted by the Developer shall be signed by a registered civil engineer and all Work shall be in accordance with good engineering practice.

21-3.2 Standard Criteria

The City Standard Specifications set forth the procedure for designing and preparing Plans and Specifications for water mains, facilities and appurtenances to be built within the City's water service area. These standards shall include the Specifications on design and installation of ductile iron pipe, and polyvinyl chloride (PVC) pressure pipe.

Whenever, water and sanitary Sewer Plans are to be designed and installed under one project, said Work shall be shown on the same construction Plans. In this case the Developer's engineer shall supply the City the original tracings for the final record.

21-4 ENFORCEMENT

Provisions of these design and construction standards shall be enforced by the Engineer.

PART III – DESIGN CRITERIA

21-5 WATER MAIN PRESSURES, CAPACITIES, AND SIZES

21-5.1 Quantity of Domestic Flow

Water needs shall be determined from maximum potential population and land use of the area to be served. For design purposes, the design domestic flow shall equal the peak hour demand. In order to determine the design domestic flow, the following criteria shall be used, unless otherwise approved by the Engineer:

> 5 G.P.M. per service plus fire flow. For commercial, manufacturing and industrial, the Engineer shall be contacted for approval of values to be used.

21.5.2 Quantity of Fire Flow

Fire flow shall be determined, using the Insurance Services Office Guide for Determination of Required Fire Flow, latest edition or as designated by the City of Fresno Fire Department. Criteria for fire system design requires that the system pressure at the point of delivery shall be at least 20 pounds per square inch under peak hour flow conditions, plus fire flow.

Fire Flow at residential fire hydrants shall be a minimum of 1,500 GPM with a water system residual pressure of 20 pounds per square inch.

Design of water main sizing shall include fire flow requirements and domestic and/or industrial water demand.

21.5.3 Pressure

Water mains shall be designed so that service pressures range between 45 and 60 psi, except under fire flow conditions where a residual pressure of 20 psi is allowable.

21.5.4 Velocity

Water mains shall be designed to provide a mean velocity not more than five (5) feet per second under Maximum Daily Demand flow.

21-5.5 Head Loss

Water mains shall be designed to provide a mean head loss of not more than five (5) feet per thousand feet of pipe under Maximum Daily Demand flow.

21-5.6 Hazen-Williams "C"

Pipe analysis shall be performed by assuming a value of 110 for Hazen-Williams co-efficient "C".

21-5.7 Minimum Water Main Size

Water Mains shall have an inside diameter of six (6) inches or more, where fire flow is to be transported. Four (4) inch mains may be permitted by the Engineer for cul-de-sacs, 150 feet and shorter when the main serves less than five services and when no fire hydrant is connected to the main.

21-6 LOCATION OF AIR RELEASE VALVE ASSEMBLIES

Air release valve assemblies shall be located at all points where air pockets may form and at locations shown and/or established by the Engineer.

21-7 LOCATION OF BLOW-OFF ASSEMBLIES

Blow-off assemblies shall be located at low points and dead ends, where sediment may collect. Fire hydrants may be substituted for blow-off assemblies. Design class shall be compatible with the pipeline working pressure.

21-8 FIRE HYDRANT ASSEMBLIES

Location of, and fire flow rate at, fire hydrant assemblies shall be approved by the City of Fresno Fire Department prior to approval of plans by the Engineer and Water Systems Manager.

21-9 WATER MAIN LOCATIONS

21-9.1 Water Main Location in Roads or Streets

The centerline of water mains shall be located in public Streets in accordance with Standard Drawing No. P-46 of City Standard Drawings. A Minimum of ten (10) feet of clearance must be maintained between parallel Sewer and water lines. Water line locations shall be dimensioned from property line and centerline or section line of the Street.

21-9.2 Curved Water Main Requirements

In curved Streets the water main shall not cross the center line, but shall follow the Street curvature using joint deflections or fittings or as shown on the drawings. Bending of PVC pipe barrels to accomplish horizontal or vertical curves is not permitted.

21-9.3 Joint Deflection for Curved Water Main

Deflection in joints of pipe shall be as limited by manufacturers recommendation.

21-9.4 Elbows

Elbows shall be placed at locations where coupling deflection would exceed the allowable, as limited by manufacturer's recommendation.

21-9.5 Water-Sewer Separation

The provisions of State Health Codes shall be met in locating water mains.

21-10 CRITERIA FOR THE SEPARATION

21-10.1 Basic Separation Standards

The "California Waterworks Standards" sets forth the minimum separation requirements for water mains and Sewer lines. These Standards, contained in 22 California Code of Regulations 64572, specify:

(a) (1) Parallel Construction: The horizontal distance between pressure water mains and Sewer lines shall be at least 10 feet. See Figure 1.

(b) (2) Perpendicular Construction (Crossing): Pressure water mains shall be at least one foot above sanitary Sewer lines where these lines must cross. See Figure 2.

(c) Separation distances specified in (a) shall be measured from the nearest edges of the facilities.

(d) Common Trench: Water mains and Sewer lines must not be installed in the same trench.

When water mains and sanitary Sewers are not adequately separated, the potential for contamination of the water supply increases. Therefore, when adequate physical separation cannot be attained, an increase in the factor of safety shall be provided by increasing the structural integrity of both the pipe materials and joints.

21-10.2 Exceptions to Basic Separation Standards

Local conditions, such as available space, limited slope, existing structures, etc., may create a situation where there is no alternative but to install water mains or Sewer lines at a distance less than that required by the Basic Separation Standards. In such

cases, alternative construction criteria as specified in Section 21-11 shall be followed, subject to the Special Provisions in Section 21-10.3, below.

Water mains and Sewers of 24 inches diameter or greater may create special hazards because of the large volumes of flow. Therefore, installations of water mains and Sewer lines 24 inches diameter or larger shall be reviewed and approved by the Health Agency prior to construction.

21-10.3 Special Provisions

The Basic Separation Standards are applicable under normal conditions for sewage collection lines and water distribution mains. More stringent requirements may be necessary if conditions, such as, high groundwater exist.

Sewer lines shall not be installed within 25 feet horizontally of a low head (5 psi or less pressure) water main.

New water mains and Sewers shall be pressure tested where the conduits are located ten feet apart or less.

In the installation of water mains or Sewer lines, measures shall be taken to prevent or minimize disturbances of the existing line. Disturbance of the supporting base of this line could eventually result in failure of this existing pipeline.

Special consideration shall be given to the selection of pipe materials if corrosive conditions are likely to exist. These conditions may be due to soil type and/or the nature of the fluid conveyed in the conduit, such as a septic sewage which produces corrosive hydrogen sulfide.

<u>Sewer Force Mains</u>:

Sewer force mains shall not be installed within ten feet (horizontally) of a water main.

When a Sewer force main must cross a water line, the crossing shall be as close as practical to the perpendicular. The Sewer force main shall be at least one foot below the water line.

When a new Sewer force main crosses under an existing water main, all portions of the Sewer force main within ten feet (horizontally) of the water main shall be enclosed in a continuous Sleeve.

When a new water main crosses over an existing Sewer force main, the water main shall be constructed of pipe materials with a minimum Rated Working Water Pressure of 200 psi or equivalent pressure rating.

21-11 ALTERNATE CRITERIA FOR CONSTRUCTION

The construction criteria for Sewer lines or water mains where the Basic Separation Standards cannot be attained are shown in Figures 1 and 2. There are two situations encountered:

Case 1 – New Sewer Line – New or existing water main.

Case 2 – New Water Main – Existing Sewer line.

For Case 1, the alternate construction criteria apply to the Sewer line.

For Case 2, the alternate construction criteria may apply to either or both the water main and the Sewer line.

The construction criteria shall apply to the House Laterals that cross above a pressure water main but not to those House Laterals that cross below a pressure water main.

Case 1: New Sewer Being Installed (Figures 1 and 2)

Zone	Special Construction Required for Sewer
A.	Sewer lines parallel to water mains shall not be permitted in this zone without approval from the responsible Health Agency and Water Supplier.
B.	A Sewer line placed parallel to a water line shall be constructed of: 1. Extra strength vitrified clay pipe with Compression Joints. 2. Plastic sewer pipe with rubber ring joints (per ASTM D3034) or equivalent. 3. Ductile iron pipe with Compression Joints. 4. Any Sewer pipe within a continuous Sleeve.
C.	A Sewer line crossing a water main shall be constructed of: 1. A continuous section of ductile iron pipe with hot dip bituminous coating and Mechanical Joints. 2. A continuous section of Class 200 (DR 14 per AWWA C900) plastic pipe or equivalent, centered on the pipe being crossed. 3. A continuous section of reinforced concrete pressure pipe (per AWWA C302-74) centered on the pipe being crossed. 4. Any Sewer pipe within a continuous Sleeve.
D.	A Sewer line crossing a water main shall be constructed of: 1. Ductile iron pipe with hot dip bituminous coating and Mechanical Joints. 2. A continuous section of Class 200 (DR 14 per AWW A C900) plastic pipe or equivalent, centered on the pipe being crossed.

3. A continuous section of reinforced concrete pressure pipe (per AWWA C302-74) centered on the pipe being crossed.

4. Any Sewer pipe within a continuous Sleeve.

5. Any Sewer pipe separated by a ten-foot by ten-foot, four-inch-thick reinforced concrete slab.

Case 2: New Water Mains Being Installed (Figures 1 & 2)

Zone

A. No water mains parallel to Sewers shall be constructed without approval from the Health Agency.

B. If the Sewer paralleling the water main does not meet the Case 1, Zone B, requirements, the water main shall be constructed of:

1. Ductile iron pipe with hot dip bituminous coating.

2. Class 200 pressure rated plastic water pipe (DR 14 perAWWAC900) or equivalent.

C. If the Sewer crossing the water main does not meet the Case 1, Zone C, requirements, the water main shall have no joints in Zone C and be constructed of:

1. Ductile iron pipe with hot dip bituminous coating.

2. Class 200 pressure rated plastic water pipe (DR 14 per AWWA C900) or equivalent.

D. If the Sewer crossing the water main does not meet the requirements for Case 1, Zone D, the water main shall have no joints within four feet from either side of the Sewer and shall be constructed of:

1. Ductile iron pipe with hot dip bituminous coating.

2. Class 200 pressure rated plastic water pipe (DR 14 per AWWA C900) or equivalent.

PARALLEL CONSTRUCTION
(CROSS SECTION OF TRENCH)

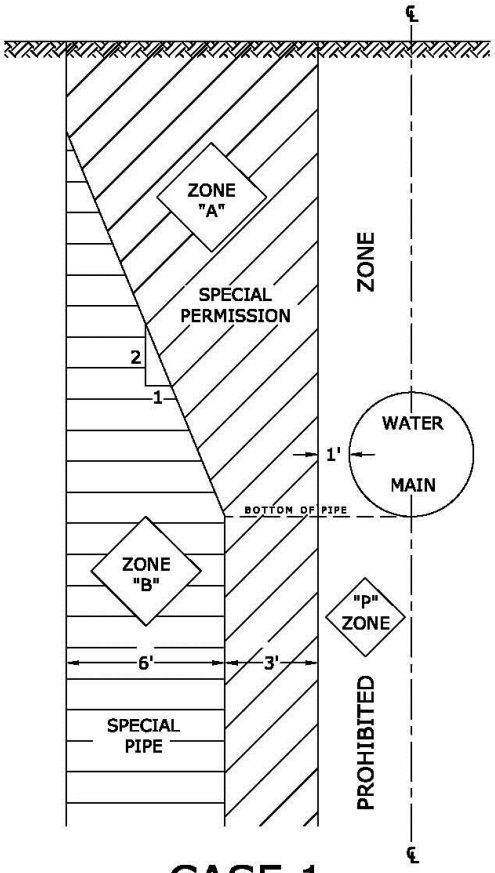

CASE 1
NEW SEWER

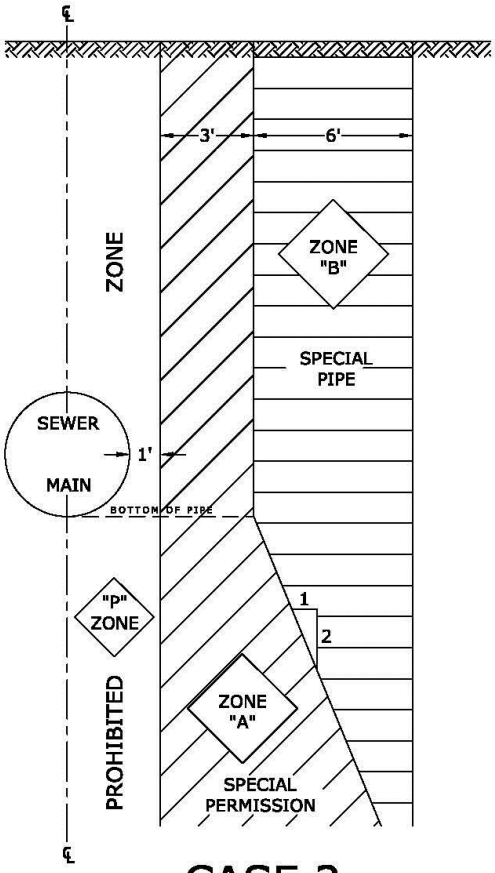

CASE 2
NEW WATER

NOTES:
1. ZONES ARE IDENTICAL ON EITHER SIDE OF CENTER LINES.
2. "P" ZONE IS A PROHIBITED CONST. ZONE PER SECTION 64630, TITLE 22, CALIF. ADMINISTRATIVE CODE.

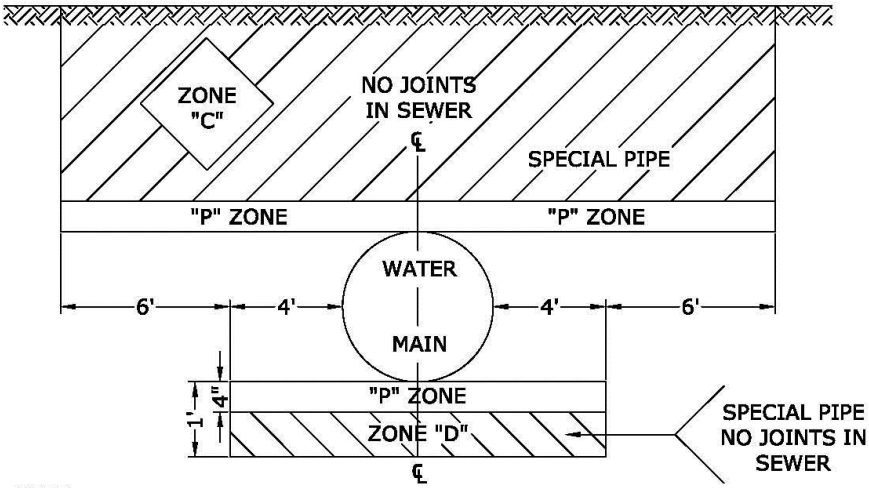

NOTE:
"P" IS A PROHIBITED
CONSTRUCTION ZONE

CASE 1
NEW SEWER

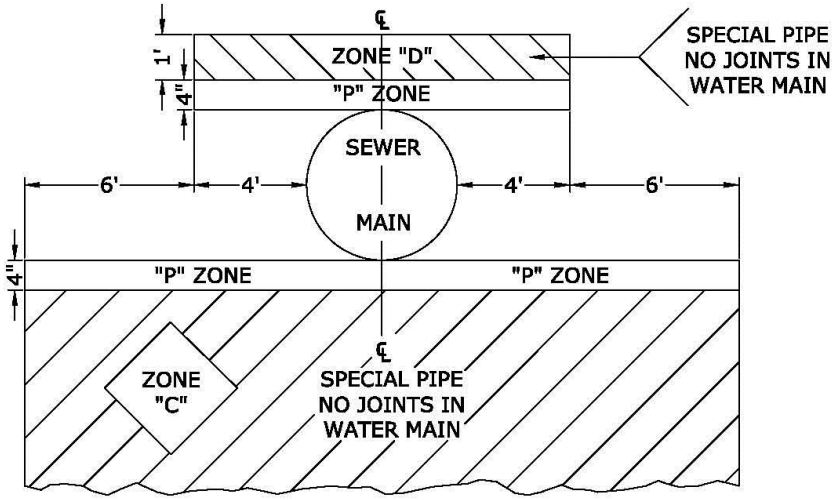

NOTE:
"P" IS A PROHIBITED
CONSTRUCTION ZONE

CASE 2
NEW WATER

21-12 PROCEDURE FOR WATER AND SEWER SYSTEM INSTALLATIONS IN SUBDIVISIONS

a. Installation of all Sewer mains, laterals and manholes and backfill.

b. Installation of all water mains, services and hydrants and backfill.

c. Compact all Sewer trenches.
   - c1. Make preliminary pressure test. (Optional)
   - c2. Locate and repair leaks, if any.
   - c3. Recompact if necessary.

d. Compact all water trenches.
   - d1. Make preliminary pressure test. (Optional)
   - d2. Locate and repair leaks, if any.
   - d3. Recompact if necessary.

e. Items (c) and (d) may be done simultaneously if conditions permit.

f. All trenches shall be identified. Contractor shall also locate and mark Sewer and water on curb face when constructed.

g. Compaction tests on sewer and water taken by City.

h. Final air test for sewer and pressure test for water, providing all leaks are repaired all compaction tests have been approved.

i. Any failure of final tests would require Contractor to reinitiate sequence of work starting with Item (g).

j. The Water Division will construct the wet tie to connect to the City's system. This will allow the Contractor to sterilize and flush the newly constructed system. There is often an associated charge for the construction of these wet ties.

k. Flushing water mains shall not be allowed in Street area if it conflicts with sewer and water installations. Often done after compaction tests have passed. Water seeps into trenches and holds up Developer's paving while Street dries out.

l. If storm sewers are to be installed, they shall be constructed first, unless otherwise directed.

21-13 EASEMENTS

Non-metallic pipes may be allowed in Easements which are neither confined or interior Easements.

21-13.1 Easements

The minimum width of a water facility Easement shall be approved by the Engineer.

21-13.2 Water Main Location in Easement

The water main shall be located 5 feet north or west of the center line of the Easement except where otherwise approved by the Engineer.

21-13.3 Where Easements Follow Common Lot Lines

The full Easement width shall be on one lot, in such a manner that access to lines will not be obstructed by walls, trees, or permanent improvements. Where this requirement cannot be met without interfering with existing buildings, Easements may straddle lot lines, but the water line shall not be located on the lot lines.

21-13.4 Deeds for Easements

Deeds for Easements shall provide for restrictions of permanent construction within the Easement to provide ingress and egress for maintenance. A recent title report will be required prior to acceptance of the Easement.

21-13.5 Dedications

Dedications shall be in accordance with City standard practice.

(A) For subdivision tracts the owners of land included within the subdivision shall provide a bill of sale on a form provided by the City. This bill of sale shall be a part of the acceptance of the subdivision.

(B) For other than subdivision tracts, the following shall be conveyed to the City:

(1) A deed of Easement satisfactory to the City for the operation maintenance of the water facilities shall be prepared by a registered engineer or land surveyor, on City Easement forms properly executed by the owners;

(2) A bill of sale to the City for the water mains and appurtenances.

21-14 DEPTH OF WATER MAINS

21-14.1 Basic Requirements

Water mains shall be installed at a depth which shall be in accordance with the applicable ordinances, regulating the separation between water supply and sewerage facilities.

21-14.2 Standard Depths

Minimum depth shall be 42 inches to top of pipe measured from Street or surface above the pipe. Where the natural ground above the pipe line trench has been over-excavated and/or the pipe line is to be placed in the new embankment, embankment material shall be placed and compacted to an elevation of not less than 3 feet above the top of pipe prior to the trench excavation. Where 42" from top of curb cannot be

maintained, pipe shall be installed with selected or imported bedding as approved by the Engineer or metallic pipe material shall be used.

21-14.3 Exceptions

Designs not in accordance with Figure 2 shall be submitted to the Engineer for approval together with evidence that it complies with Figure 1.

21-15 STRUCTURAL REQUIREMENTS

21-15.1 Buried Facilities

All structures and pipe placed underground shall be of sufficient strength to support with an adequate factor of safety the following applicable loads: the backfill, road surfacing, H-20 truck loading with impact, high loading to be specified by the Engineer or as required by permits for crossing State highways, railroad tracks, canals, and streams. Calculations showing factor of safety may be required by the Engineer.

21-15.2 Other Pipes and Structures

Water lines designed to cross under other pipes or structures shall be protected from damage and shall be constructed in order not to endanger the other pipe or structure. Minimum clearance between outside of pipes or between pipes and other structures is 12 inches unless otherwise approved by the Engineer.

21-15.3 Flexible Joints

Flexible joints which will allow for differential settlements or other movement of water pipe, facilities, adjacent pipe and adjacent structures shall be provided where water lines enter encasements or other structures. Flexible joints shall be within three feet of such structures. Any deviations from these requirements shall require approval from the Engineer.

21-15.4 Thrust Blocks

The use of concrete thrust blocks may be required but will only be allowed when specifically approved in writing by the Engineer.

21-15.5 Mechanical Restrained Joints

Restrained Joint fittings shall be provided at all tees, crosses, reducers, bends, caps, plugs and valves such that the pipe is fully restrained in any one given direction.

These shall meet Uni-B-13 and ASTM F 1674-96 for PVC and be UL/FM approved through 12" for both ductile iron and PVC. The restraint mechanism shall consist of individually activated gripping surfaces to maximize restraint capability. Twist-off nuts, sized the same as the tee-head bolts, shall be used to ensure proper activating of restraining devices. The gland shall be manufactured of ductile iron conforming to ASTM A536-80. The retainer-gland shall have a pressure rating equal to that of the pipe on which it is used through 14" with a minimum safety factor of 2:1. See City Standard Drawing Nos. W-31, W-32, W-33, W-34, W-35, W-36 and W-37. Gland shall

be Megalug by EBAA Iron, Inc., Uni-Flange by Ford Meter Box Co. Inc., or approved equal.

Push-on Restraint: When it is necessary to restrain push-on joints adjacent to restrained fittings, a harness restraint device shall be used. All harnesses shall have a pressure rating equal to that of the pipe on which it is used through 14". Harness assemblies including tie bolts shall be manufactured of ductile iron conforming to ASTM A536-80. Harness shall be manufactured by EBAA Iron, Inc., Ford Meter Box Co. Inc., or approved equal.

21-16 DESIGN CRITERIA FOR WATER METERS

The City shall determine the appropriate meter sizes and types, based on the building plumbing plans and the landscape sprinkler plans furnished by the Developer. Unless otherwise required by the Engineer, the aforementioned determination is not required for single-family residential units, where a minimum 1" service for each unit is required.

PART IV – MATERIALS

21-17 REQUIREMENTS

Materials shall be chosen for their strength, durability and ease of maintenance, with due consideration for dead and live loads, beam strength and resistance to corrosion. Pipe joints shall be selected to provide sufficient flexibility to adjust to the residual conditions during and after construction.

21-18 PIPE MATERIALS

The following are acceptable materials for water line construction:

21-18.1 Ductile Iron Pipe and Ductile Iron Fittings

Ductile iron pipe and associated fittings shall conform to the applicable sections of the City Standard Specifications.

(a) Fabrication

Ductile iron pipe shall be Pressure Class 350 ductile iron for sizes up to and including 12 inch and Pressure Class 250 ductile iron from 14 inch to 20 inch; complete with all accessories and conforming to ANSI/AWWA C151/A21.51, unless otherwise indicated on the construction plans. Ductile iron pipe shall be eighteen (18) foot laying lengths.

(b) Joints

Joining of ductile iron pipe shall be with elastomeric-gasket bell ends or couplings. The joints and rubber gaskets shall be in conformance with ANSI/AWWA C111/A21.11.

(c) Inspection and Testing

City at its discretion may inspect the plant facilities, materials, manufacture and testing of the pipe to be furnished by Contractor. Testing of the pipe to ensure compliance with these Specifications shall be made in accordance with applicable AWWA Standards latest edition. All cost incurred by City for witnessing the manufacture of the pipe and in obtaining test results shall be borne by Contractor furnishing the pipe.

(d) Affidavit of Compliance

City may elect to waive any of the above testing and inspection requirements in which event the Engineer may require the manufacturer to submit affidavits stating that all pipe has been manufactured and tested in accordance with this Specification.

(e) Fittings

All fittings for use with ductile iron pipe shall be ductile iron manufactured in accordance with ANSI/AWWA C110/A21.10 or ANSI/AWWA C153/A21.53. All Mechanical Joint or push-on joint fittings shall be rated for 350 psi working pressure in sizes 4" through 24". Flange fittings shall be rated for 250 psi working pressure. Flange drilling pattern shall be in accordance with ANSI/AWWA C110/A21.10, or commonly referred to as a 125# drilling pattern.

In accordance with Section 4.3 of ANSI/AWWA C153/A21.53, fittings may be provided with a cement-mortar lining and asphalt coating or fusion bonded epoxy inside and outside. Fusion bonded epoxy shall be in accordance with ANSI/AWWA C116/A21.16 and shall be applied to interior and exterior surfaces.

All tees and crosses shall have all flanged ends with the exception of fire hydrant, blowoff, and pumping connections, which shall have flange by Mechanical Joint or push-on joint ends; reducers shall have flange by Mechanical Joint ends; elbows maybe either Mechanical Joint or flanged ends.

(f) Appurtenances

All appurtenances used in conjunction with the ductile iron pipe shall meet the City Standard Specifications.

21-18.1.1 Confined Easements

All confined easement construction shall be ductile iron.

21-18.1.2 Polyvinyl Chloride (PVC) Pressure Pipe

Polyvinyl chloride (PVC) pressure pipe shall conform to the applicable sections of the City Standard Specifications.

(a) Fabrication

Polyvinyl chloride pressure pipe shall be Class 150 DR 18 for 12" and smaller and Class 235 DR 18 for 14" and larger and shall conform to AWWA C-900 latest edition for 12" and smaller and AWWA C905 latest edition for 14" and larger, unless otherwise indicated on the construction Plans.

(b) Joints

Joining of PVC pipe shall be with elastomeric-gasket bell ends or couplings. The bell ends shall be an integral thickened bell end (IB) or an integral Sleeve-reinforced bell end. The bell end joints shall have a minimum wall thickness of the bell or Sleeve-reinforced bell equal, at all points, to the DR Requirements for the pipe. The minimum wall thickness in the ring groove and bell-entry sections shall equal or exceed the minimum wall thickness of the pipe barrel.

If bell ends are not part of the pipe, one PVC coupling, manufactured of the same material and by the same manufacturer as the pipe, shall be furnished with each length of pipe together with two (2) rubber rings. The coupling shall be designed to ensure a water-tight joint with the pipe. The coupling body and socket shall have a wall thickness equal to the pipe barrel thickness with which the coupling is to be used.

All rubber rings shall be furnished by the pipe manufacturer. These rubber rings (Elastomeric Gaskets) shall be manufactured to conform with the requirements of ASTM F-477.

(c) Hydrostatic Proof-test

Each length of pipe shall be proof-tested at four (4) times its rated Pressure Class for a minimum dwell of five (5) seconds.

(d) Inspection and Testing

City at its discretion may inspect the plant facilities, materials, manufacture and testing of the pipe to be furnished by Contractor.

Testing of the pipe to ensure compliance with these Specifications shall be made in accordance with applicable AWWA Standards latest edition. All cost incurred by City for witnessing the manufacture of the pipe and in obtaining test results shall be borne by Contractor furnishing the pipe.

(e) Affidavit of Compliance

City may elect to waive any of the above testing and inspection requirements in which event the Engineer may require the manufacturer to submit affidavits stating that all pipe has been manufactured and tested in accordance with this Specification.

(f) Fittings

All fittings for use with Polyvinyl chloride pipe shall be ductile iron manufactured in accordance with ANSI/AWWA C110/A21.10 or ANSI/AWWA C153/A21.53. All Mechanical Joint or push-on joint fittings shall be rated for 350 psi working pressure in sizes 4" through 24". Flange fittings shall be rated for 250 psi working pressure. Flange drilling pattern shall be in accordance with ANSI/AWWA C110/A21.10, or commonly referred to as a 125# drilling pattern. In accordance with Section 4.3 of ANSI/AWWA C153/A21.53, fittings may be provided with a cement-mortar lining and asphalt coating or fusion bonded epoxy inside and outside. Fusion bonded epoxy shall be in accordance with ANSI/AWWA C116/A21.16 and shall be applied to interior and exterior surfaces.

All tees and crosses shall have all flanged ends with the exception of fire hydrant, blow-off, and pumping connections, which shall have flange by Mechanical Joint or push-on joint ends; reducers shall have flange by Mechanical Joint ends; elbows maybe either Mechanical Joint or flanged ends. A/C to C.I.O.D. PVC adapter rings may not be used.

(g) Appurtenances

All appurtenances used in conjunction with PVC shall meet the City Standard Specifications.

21-19 VALVES

21-19.1 Butterfly Valves

(a) General

These Specifications designate the requirements for the manufacture and installation of butterfly valves. The Contractor shall furnish all labor, materials, tools and equipment necessary to install, complete and ready for operation, the valves as shown on the Plans and herein specified.

(b) Materials and Workmanship

Butterfly valves shall be of the rubber-seated tight-closing type. They shall meet or exceed AWWA Standard C504 latest revision. All valves must use full AWWA C504 Class 150B valve shaft diameter, and full Class 150B underground-service-operator torque rating throughout entire travel. All valves shall be NSF approved. Valve body shall be high-strength cast iron ASTM A126 Class B with 18-8 Type 304 stainless steel body seat. Valve vane shall be high-strength cast iron ASTM A48 Class 40, having rubber seat mechanically secured with an integral 18-8 stainless steel clamp ring and 18-8 stainless steel self-locked screws.

Rubber seat shall be full-circle 360 degree seat not penetrated by the valve shaft. Valve shaft shall be one piece, extending full size through the entire

valve. Valve shaft shall be 304 stainless steel. Packing shall be O-ring cartridge designed for permanent duty underground. All exposed cap screws and fasteners on the valve body and flanges shall be Ni-Cad steel or approved equal.

(c) Valve Operations

Valve operators shall be of the manual type. The operator shall be totally enclosed, self-locking worm gear or screw type, with adjustable stops to limit disc travel. The number of complete turns of the operator required to rotate this disc 90 degrees shall be approximately the same as an equivalent sized gate valve. All valve operators shall be fully gasketed, weather-proof and factory packed with grease. Operators shall be of the size required for opening and closing the valve against 150 PSI water pressure, and shall have a torque rating of not less than shown in AWWA C-504, 1, Class 150-B. Operators for valves located above ground shall have disc-position indicators and a hand-wheel.

Should the difference between the operating nut and the valve cover exceed 50 inches, an extension mast shall be installed in order that the operating nut will not exceed 50 inches from the valve cover or grounds surface. Buried operators shall be worm gear or screw type and shall be threaded to accommodate a two inch operating nut, and shall include the operating nut, and shall include 3/4" hex head plated bolt for operating nut hold-down. All exposed fastenings shall be specifically designed and suitable for permanent buried service. Input shaft and thread for the operating nut shall be at a right angle to the operating shaft. The input shaft shall extend vertically from the side when the valve is in the horizontal position.

Epoxy shall be applied to all surfaces of valve body and vane to an average minimum thickness of 5 mils, conforming to AWWA C 550 Standards. A primer shall be applied before the coating per the epoxy manufacturer's recommendations. The coating shall be applied to the entire valve body and vane before final assembly.

(d) Valve Ends

Valve ends shall be for Mechanical Joint pipe and shall conform to ANSI CIII (AWWA A21.11-1972, Class 125) and drilled to ANSI B16.1 for cast iron flanges and flanged fittings, Class 125. Flanges shall be 125# ANSI. The butterfly valves shall be right closing Class 150-B designed for tight shut off with a maximum differential pressure across the disc of 200 psi. Valve shafts shall consist of a one-piece unit extending completely through the valve disc.

(e) Valve Boxes, Nuts and Bolts, Gaskets and Marker Posts shall conform to the provisions specified herein for gate valves.

21-19.2 Gate Valves

(a) General

These Specifications designate the requirements for the manufacture and installation of gate valves. The Contractor shall furnish all labor, materials, tools and equipment necessary to install, complete and ready for operation, the valves as shown on the Plans and herein specified.

(b) Materials and Workmanship

Gate valves shall be non-rising stem resilient seated type. Valves shall conform to the latest version of AWWA C-509 and C-550. Valve bodies shall be ductile iron and wedges shall be fully rubber encapsulated.

The stem shall have two O-rings above the collar and one O-ring below the collar. Stem seals must be replaceable with the valve under pressure. The stem material shall be stainless steel [ANSI-420], low zinc bronze or manganese bronze. The waterway shall be full size. No cavities or depressions are permitted in the seat area. Valve body and bonnet shall be electrostatically applied, fusion bonded, epoxy coated both inside and out by the valve manufacturer. The coating shall meet the requirements of AWWA C-550 and NSF 61 approved. All valve body and bonnets bolts and nuts shall be type 304 stainless steel.

All valves must be tested by hydrostatic pressure equal to the requirements in the AWWA C-509 specifications prior to shipment.

Tapping gate valve assemblies shall be used only in conjunction with tapping Sleeves and shall be furnished and installed by the Water Division.

Nuts and bolts used for bolting flanged-end gate valves to pipeline flanges above ground, shall be hexagonal head machine bolts and hexagonal nuts conforming to ASTM A307, Grade B. All buried flanged-end gate valves shall be bolted to the pipe line flanges with Ni-Cad nuts and bolts or approved equal.

(c) Gaskets

Gaskets for flanged-end gate valves shall be right face 1/8”.

(d) Valve Ends

Valves may be provided with Mechanical Joint ends, push-on joint ends, flanged ends, Mechanical Joint by flange ends or push-on joint by flange ends.

21-20 APPURTENANCES

21-20.1 Blow-off Assemblies for Water Mains

(a) General

Blow-off assemblies shall be furnished and installed by the Contractor at the locations shown on the Plans. The Contractor shall furnish all labor, materials, tools and equipment necessary to furnish and install, complete and ready for operation, the assemblies as shown on the plans and herein specified. See City Standard Drawing Nos. W-9 and W-10.

(b) Materials, Fabrication and Installation

(1) Materials Shall be ductile iron and sized as designated on the City Standard Drawing Nos. W-9 and W-10 or on the Plans.

(2) Valves Gate valves or butterfly valves for blow-off assemblies shall be as specified herein.

(3) Pipes and Fittings Shall be 4 inch or 6 inch ductile iron and shall conform with the standard for ductile iron pipe water main and fittings. Joints on the water main side of the gate valves shall be flanged. Properly restrained MJ fittings are allowed downstream of the gate valve.

(4) Pipe Sleeves and Lids Shall be used per City Standard Drawing No. W-7.

(5) Meter Boxes and Lids shall be per City Standard Drawing Nos. W-9 and W-10 or Engineer approved equivalent and marked "Water". Covers shall be seated flush with the surface of the natural ground or paved surface, such that they may not be damaged by, nor present an obstruction or rough surface to traffic.

21-20.2 Air Release Valve Assemblies

(a) General

Air release valve assemblies shall be furnished and installed by the Contractor at all points where air pockets may form and at the locations shown and/or established in the field by the Engineer. The Contractor shall furnish all labor, materials, tools and equipment necessary to install, complete and ready for operation, the valve assemblies shown on the plans and herein specified. See City Standard Drawing No. W-13.

(b) Materials, Fabrication and Installation

Materials shall be in accordance with City Standard Drawings. The valve shall be a 'Val-matic model 3/4-25VC' or approved equal

21-20.3 Water Service Assemblies (2 inches and smaller)

(a) General

Water service assemblies shall be furnished and installed by the Contractor at the locations shown on Plans or established in the field by the Developer. The Contractor shall furnish all labor, materials, tools and equipment necessary to install, complete and ready for operation, the assemblies as shown on the Plans and herein specified. The Contractor shall perform the installation of the lot services in accordance with the City Standard Drawing Nos. W-1 and W-2. The Developer shall provide the City with a Plan showing the "As Built" location of all services.

(b) Materials, Fabrication and Installation

(1) Materials Shall be those designated on the City Standard Drawings o

Service Size	Corp. Stop	Service Pipe	Angle Meter Stop
1"	1"	1"	1"
1 ½"	1 ½"	1 ½"	
2"	2"	2"	

r
p
l
a
ns. See City Standard Drawing No. W-1.

(2) Pipe and Fittings Service pipe shall be Type K soft copper tubing, or Polyethylene CTS 200 psi SDR-9 PE 3408. Solder fittings shall be soldered with 95% tin / 5% lead or silver solder (pure).

(3) Saddles Service saddles shall be used for all 1", 1-1/2", and 2" taps made on ductile iron and PVC pipe. A circumferential type stainless steel band or bands shaped to fit the actual O.D. of the pipe shall be used. Double strap bands shall provide a minimum bearing width of 1-1/2 inches per band along the axis of the pipe. Single strap bands shall provide a minimum bearing width of 3 inches per band along the axis of the pipe. Saddles shall not have lugs that will cut into the pipe when the saddle is tightened. Saddles are to be Jones, Ford, Mueller or approved equal.

Multiple O.D. range saddles shall not be used.

(4) Service Taps In no case shall a service tap be made in a main closer than 18 inches to a bell coupling joint, or fitting. Service taps shall not be less than two feet apart. Service taps shall be located opposite the service locations so that the service laterals will be perpendicular to the Street centerline. Service tap locations varying more than two feet from the perpendicular must be approved by the Engineer prior to installation. Service taps shall be in accordance with City Standard Drawing Nos. W-1 and W-2. Where dissimilar metals are joined, a dielectric connection, approved by the Engineer shall be provided. Hole size drilled in the pipe shall be the same size as the corporation stop. The cutting tool shall be a shell type (hole) cutter which will retain the coupon.

Tapping Sleeves and corporation stop valves shall be used for service connections of 2 inches and smaller. For ductile iron water mains, double strap ductile iron service saddles must be used.

(5) Service Boxes

Service casing and covers and meter boxes and covers shall be furnished and installed by the Contractor as shown of City Standard Drawing Nos. W-1 and W-2. All service casings shall be complete and in place at the time of acceptance of the subdivision. All services shall be marked by an “X” or “W” clearly visible on the curb face. Minimum size 1 ½” X 1 ½ “ maximum 3" X 3".

(6) Curb Stops in Driveway

The Developer has the following alternatives for services located in driveways:

(a) Curb stops remaining in driveways shall be placed inside a meter box with an H20 rated traffic lid.

(b) Relocate outside of driveway a minimum distance of one foot.

Services must be relocated by City Forces after the sterilization phase of the new water system has been passed. The cost for relocation will be the actual cost of labor, equipment and materials.

21-20.4 Valve Service Casing and Lid

Valve Service Casing and Lid Shall conform with City Standard Drawings. Valve covers shall be cast-iron Kearney Manufacturing Roll-in Frame No. KP 2050 and Roll-in Cover No. KP 3050 or approved equal and shall be marked as shown on the City Standard Drawings. Covers shall be seated flush with the surface of the natural ground or paved surface such that they may not be damaged by, or present an obstruction or rough surface to traffic. Covers shall have a 9 inch wide and 6 inch thick stabilizing concrete ring constructed when the valve is outside the pavement area.

SECTION 22 – WATER FACILITIES

22-1 SCOPE

These City Standard Specifications are intended to describe the execution and workmanship to be used in construction of a water system operated in the City of Fresno. It is presumed that the Developer or his/her engineer has prepared such general and special Specifications as are necessary to define the nature and location of the Work, contractual arrangements, payment for Work, and any other matters concerning the owner or his/her Contractor. All Street work permits shall be obtained and fees shall be paid by the Developer or Contractor.

22-2 GENERAL

22-2.1 Quality Control of Materials

The quality control of materials shall conform to the applicable sections of the City Standard Specifications as published by the City of Fresno.

22-2.2 Quality of Workmanship

All Work will be done by Persons experienced in the specific Work, under competent supervision and in a first class manner to the Engineer's complete satisfaction. Every precaution shall be taken to prevent foreign material from entering the pipe while it is being placed in the trench. If the pipe-laying crew cannot put the pipe into the trench and in place without getting earth into it, the Engineer may require that before lowering the pipe into the trench a heavy tightly woven burlap bag of suitable size shall be placed over each end and left there until the connection is to be made to the adjacent pipe. During laying operations, no debris, tools, clothing or other materials shall be placed in the pipe. After placing a length of pipe in the trench and completing the jointing operation, in a method approved by the pipe manufacturer, the pipe shall be secured in place with approved backfill material placed under it. At times when pipe laying is not in progress, the open ends of the pipe shall be closed by a watertight plug or other means approved by the Engineer. This provision shall apply during any Work stoppage.

22-2.3 Connections to Existing Facilities

Connections shall be performed by Water Division personnel only. Three (3) Days notice shall be given before any connection is to be made.

22-2.4 Defective Work

Any defective materials or workmanship which shall become evident within one year after the City assumes responsibility for the completed Work shall be replaced or repaired without cost to the City. Refusal of the Contractor to correct defective Work which is his/her responsibility will be considered just cause for excluding him/her from performing future Work to be connected to the City's system. Such exclusion does not impair the City's right to bring legal action to correct the deficiencies.

22-2.5 Construction Staking and "Record-Drawings"

Construction stakes will be set parallel to the water main alignment at an offset distance and direction agreed upon with the Contractor but in no case shall construction stakes be offset more than 10 feet. Stakes will be set at no greater interval than 100 feet on straight alignments. For horizontally or vertically curved water mains, the stake intervals shall be 25 feet. For all Street water mains, regardless of alignment or slope, the Developer's engineers shall determine "Record-Drawings" elevations at the top of pipe centerline at each change in pipe grade and shall provide a written record of such elevations to the inspector. The Developer's engineer shall also provide "Record-Drawings" of all main line valve locations and all service stop locations.

22-3 POLYVINYL CHLORIDE (PVC) PRESSURE PIPE AND FITTINGS INSTALLATION

22-3.1 Scope of Work

The Contractor performing the Work under this Specification shall furnish all labor tools and equipment, which are necessary to install, complete, and ready for operation, the PVC pressure pipe water mains as herein specified and/or as indicated on the contract drawings.

22-3.2 Installation

Installation shall conform to Chapter 7, Installation, of AWWA Standard C 605 and AWWA Manual M23. Bending of PVC pipe barrels to accomplish horizontal or vertical curves is not permitted.

22-3.3 Tracer Wire

Tracer wire used with PVC **where called for on the Plans** shall be copper wire, Type TW, Size AWG #10 and shall be placed under the PVC water main. Tracer tape is not allowed. All wire to wire connections shall be soldered to provide continuity and taped to prevent entry of moisture. Where tracer wire is called for, it shall be securely attached to each fire hydrant and each main line valve casing.

22-4 DUCTILE IRON PRESSURE PIPE AND FITTINGS INSTALLATION

22-4.1 Scope of Work

The Contractor performing the Work under this Specification shall furnish all labor tools and equipment, which are necessary to install, complete, and ready for operation, the ductile iron pressure pipe water mains as herein specified and/or as indicated on the contract drawings.

22-4.2 Installation

Installation shall conform to AWWA C-600 and Installation of Ductile Iron Pipe and Fittings in AWWA Manual M41.

22-5 VALVE CASING AND LID INSTALLATION

When water mains are installed, casings and lids in Street areas shall be installed in a lowered position below any sub-grade which may be removed or recompacted.

When sub-grade is compacted and base material installed and completed, casing and lids shall be completed in accordance with City Standard Drawing Nos. W-7, “Valve Lid & Paving Ring with Galvanized Casing,” and W-8, “Installation Procedure for Paving Ring and Lid”.

Valves located in the sidewalk shall be marked with a 2" X 4" stake so that casings and lids may be brought to finished grade at the time concrete is poured.

Any excavation necessary for valve casing and lid work shall be thoroughly re-compacted to the satisfaction of the Engineer. All casings shall be installed in a vertical position. All valve operating nuts shall be free of any dirt or debris and all valves shall be checked to ensure that they are left in a wide open position.

It shall be the responsibility of the Contractor to do this Work exactly as specified.

22-6 EARTHWORK FOR DUCTILE IRON AND PVC PIPE INSTALLATION

22-6.1 Trench Excavation

The trench shall be constructed per City Standard Specifications, Section 16, City Standard Drawing Nos. P-48 and W-29. Unless shown otherwise on the Plans a minimum cover of 3.5' is required for mains.

22-6.2 Trench Bottom

The trench bottom shall be true and even so that the barrel of the pipe will have soil support for its full length. Earth mounds can be used to support the pipe with the Engineer’s approval and under his/her direction.

22-6.3 Bell Holes

Bell holes are required for push-on and mechanical joint pipe. While push-on joints require only a small depression beneath each bell to allow pipe to lay flat on the trench bottom, mechanical joints require additional space for operation of a ratchet wrench.

Minor excavations, which are necessary for removing the sling and for assembling the joints, shall be made in advance of the laying crew and filled after these operations are completed.

22-6.4 Trench Width

The trench must be wide enough to permit proper installation of the pipe with room for assembling joints and tamping backfill around the pipe. The trench must be at least 12 inches wider than the outside diameter of the pipe to allow for proper placement, tamping, and compaction of the initial backfill. Per the City Standard Specifications, Section 16, the width of the trench at the top of the pipe shall not be greater than

16 inches more than the outside diameter of the barrel of the pipe to be laid therein. These requirements may be modified by the Engineer or as shown on the Plans.

22-6.5 Rock or Hard Pan Excavation

In rock or hard pan excavations it is necessary that the rock or hard pan be removed so that it will not be closer than 4 inches to the bottom and sides of the pipe for sizes up to 24 inches in diameter. This same practice shall be followed should the trench excavation pass through piles of abandoned masonry, large pieces of concrete or other debris. The pipe shall not be permitted to rest on masonry walls, piers, foundations or other unyielding, subterranean structures which may be encountered in the excavation.

22-6.6 Barricades and Safety

The Contractor shall follow all the requirements in Section 7-10.4 of the City Standard Specifications.

22-6.7 Shoring

In addition to, and consistent with public safety considerations, every precaution for safety must be provided for the workers at the Site. Shoring must comply with Cal-OSHA Standards.

22-7 USING EARTH MOUNDS

With the Engineer's approval, earth mounds may be used for pipe support if the trench bottom is firm and if firm, mounds can be built that will hold the pipe from settling during assembly and until backfilled. Do not use earth mounds in mucky soil or in wet, mushy trenches. Damp, loamy earth or sand is best.

Locate four equally spaced mounds along each length of pipe. Construct mounds using soil free of rocks, large stones or lumps of clay. The mounds shall run completely across the trench - and be at least 6" wide along the length of the pipe. The mound shall be firm and provide a clearance of at least 2" under the coupling.

22-8 BACKFILLING AND TAMPING

Backfilling usually follows pipe installation as closely as possible. This protects the pipe from falling materials, eliminates possibility of lifting the pipe due to flooding of open trench, and avoids shifting pipe out of line by cave-ins. The purpose of backfilling is not only to protect the pipe by covering it, but to provide firm, continuous support that will prevent the pipe settling or resting on the couplings. The essentials of a first class backfilling job shall be as follows:

Provide continuous bedding or support by carefully consolidating approved material under pipe and couplings and between the run of pipe and the trench walls. Provide a cushion on top by hand - placing approved material to at least 12" over the pipe - the balance can then be backfilled by machine.

The first step in providing firm, continuous support for the pipe-line is to tamp soil solidly under the pipe and couplings. Tamping can be done with tamping bars to consolidate the backfill material. Hand tamping is best accomplished with damp loamy earth or sand.

The initial backfill material used shall be slightly damp which will pack more solidly under the pipe. This initial backfill is always placed by hand. It shall be shoveled in evenly along both sides of the pipe, making a layer about 4" thick. Then the tamping bar is used to tamp this soil firmly under the pipe. If more than 4" of soil is shoveled in before tamping, the soil can bridge and fail to go under the pipe. Next, another 4" layer is shoveled in and tamped. This is repeated until the pipe is firmly bedded in compact soil up to the top of the pipe. Two 6 inch lifts are then used to achieve a 12 inch cover over the pipe. This completes what is called the ”initial” backfill, the thoroughly tamped soil which provides a continuous supporting bed for the pipeline. Where clay soil or unstable soil is encountered, the pipe shall be enveloped in a minimum of four inches of sand - then the backfill completed to at least 12" above the pipe with selected material, then dry sand or other suitable materials shall be laid.

The balance of the backfill which is usually placed by machine, need not be as carefully selected as the initial material. If approved by the Engineer, jetting or water tamping will be allowed to achieve the required compaction. Cleanup shall be in accordance with the City Standard Specifications.

22-9 TESTING AND STERILIZATION

22-9.1 General

The Specifications constituting this section designate the requirements for the procedure, materials, performance, and payment for testing and sterilization of water mains and appurtenances intended for the conveyance of potable water under pressure.

Scope of Work The Contractor shall furnish all labor, material, tools, and equipment, including all chemicals, necessary to perform all operations required to complete the testing and sterilization as herein specified.

22-9.2 Field Testing

(a) Hydrostatic Pressure Test Hydrostatic Pressure test. After the pipe and all appurtenances have been laid and the backfill has been placed and compacted, a hydrostatic pressure test shall be conducted. A hydrostatic test shall be conducted on the entire pipeline for a period of 2 hours at a hydrostatic pressure of 200 psi for Class 200 pipe and 150 psi for Class 150 pipe. In locations where there is a combination of Class 200 and Class 150 pipe, the system testing pressure shall be 150 psi. All valves in the pipeline shall be in the open position during system testing.

(b) Preparation The line shall be filled with water at least 24 hours prior to testing. While filling and immediately prior to testing, all air shall be expelled from the pipeline. Where air valves or other

suitable outlets are not available for introducing water or releasing air for test purposes, taps and fittings approved by the Engineer shall be installed and later securely plugged.

(c) Procedure The procedure shall follow those specified in the AWWA Standard C-600 Sec. 5.2 for ductile iron and C-605 Sec. 7.3 for PVC pipe. The pressure in the pipeline shall be pumped up to the specified test pressure. When the test pressure has been reached, the pumping shall be discontinued until the pressure in the line has dropped 5 psi, at which time the pressure shall again be pumped up to the specified test pressure. This procedure shall be repeated until the end of the test period. At the end of the test period, the pressure shall be pumped up to the test pressure for the last time. The total quantity of water pumped to maintain pressure shall be measured and compared to the allowable.

(d) Leakage Shall not exceed the amount calculated, using AWWA Standard C-605 for PVC and C-600 for ductile iron.

22-9.3 Sterilization

Prior to pressure testing and prior to acceptance of Work, the entire pipeline including all valves, fitting, hydrants, service laterals, and other accessories shall be sterilized in accordance with AWWA C-601 latest revision. All mains shall be flushed with potable water after completion of construction and prior to disinfection. The Contractor shall provide a sufficient number of suitable outlets at the end(s) of the line(s) being sterilized in addition to those required by the Plans, to permit the main to be flushed with water at a velocity of at least 5.5 feet per second over its entire length. The outlets provided shall meet the requirements for fittings as specified for the type main constructed. Temporary blow-offs may be installed during the sterilization and flushing to satisfy these requirements. Drainage facilities shall be constructed such that the water lines cannot be contaminated through the flushing outlet. After flushing, chlorine gas or chlorine compound solution made with liquid chlorine, calcium hypochlorite in solution or sodium hypochlorite solution shall be water mixed and introduced into the mains to form a chlorine concentration of approximately 100 ppm or that which will provide a minimum residual of 50 ppm in all parts of the line after 24 hours have elapsed.

During the sterilization process all valves, hydrants and other accessories shall be operated. After chlorination, the water shall be flushed from the line at its extremities until the replacement water tests are equal chemically and bacteriologically to those of the permanent source of supply. The placing of chlorine capsules or tablets in pipe sections during the laying process will be considered as an acceptable method of sterilization. The chlorine water solutions shall be diluted to a chlorine concentration of not more than 100 ppm and not less than 50 ppm measured in the water lines. The Contractor shall keep adequate chlorine residual testing and indicating apparatus available on the site during the entire sterilization period.

After final flushing, the flushing fitting shall be plugged with devices intended for this purpose at the pressure class of the pipe. Where water main is coated, plugs and outlets shall be similarly coated. Bacteriologic samples of water for the specified

bacteriologic test shall be taken from each end of the sterilized main (located downstream of the point of introduction of chlorine disinfectant and at other locations as determined necessary by the Engineer.) Additional samples shall be taken at intermediate points in such a manner that at least one sample is taken for each 700 feet of main. Bacterial samples will be taken a minimum of 48 hours after the mains have been flushed of all chorine.

The Contractor shall dechlorinate disinfecting water and flushing water if required by the Plans or the Engineer.

SECTION 23 – TRAFFIC SIGNALS AND STREET LIGHTING

23-1 TECHNICAL SPECIFICATIONS FOR TRAFFIC SIGNALS

23-1.1 General

Traffic Signal Poles Standards shall be in accordance with State Standard Specifications, 1997 Edition, (113 km rating/70 mph rating).

Furnishing and installing traffic signals and highway lighting and payment therefore shall conform to the provisions in Section 86, "Electrical Systems," of the State Standard Specifications and the State Standard Drawings, the City Standard Drawings, Plans and Specifications.

Signals and lighting Work is to be performed at the locations shown on the Plans.

Existing electrical systems, or approved temporary replacements thereof, shall be kept in effective operation during the progress of the Work, except when shutdown is permitted.

Work or equipment not specified or shown on the Plans which is necessary for the proper operation of the traffic signal in this section shall be provided and installed at no additional cost to the City.

The locations of foundations, standards, services, pull boxes and other appurtenances shown on the Plans are approximate. Exact locations and grades will be established as necessary by either the Traffic Engineer and/or City CM Engineer in the field.

23-1.2 Materials

Attention is directed to Section 6, "Control of Materials," of the State Standard Specifications and these Specifications.

All materials required to complete the Work under this contract shall be furnished by the Contractor.

The materials furnished and used shall be new, except such used materials as may be specifically provided for on the Plans.

All Work and materials shall be in full accordance with the latest rules and regulations of the National Board of Fire Underwriters, and local or State laws and regulations, the State of California Industrial Accident Commission's Safety Orders, and Regulations of the Pacific Gas and Electric Company pertaining to service equipment and installations thereof. All Work shall comply with Section 11-104 of the City of Fresno Municipal Code, the National Electrical Manufacturer's Association Standards and all regulations and codes as stated in Section 86-1.02, "Regulations and Code," of the State Standard Specifications. Nothing in these Plans and Specifications shall be construed to permit Work not complying with these codes.

23-1.3 Equipment List

Equipment list and drawings shall conform to the provisions in Section 86-1.04, “Equipment List and Drawings,” of the State Standard Specifications and these Specifications.

All equipment and materials that the Contractor proposes to install shall conform to these Specifications and the contract Plans. A list of substitute equipment and/or materials, along with a written descriptive summary, describing the functions of the components which the Contractor proposes to install shall be submitted along with his/her Proposal. The list shall be complete as to the name of the manufacturer, size and identifying number of each item. The list shall be supplemented by such other data as may be required.

In all cases, the judgment of the Electrical Superintendent shall be final as to whether substitute equipment and/or material recommended by the Contractor conforms to the intent of these Specifications and is acceptable for use.

23-1.4 Warranties, Guarantees and Instruction Sheets

Warranties, guarantees and instruction sheets shall conform to the provisions in Section 6-3.06, "Guarantees," of the State Standard Specifications and these Specifications. All equipment furnished shall be guaranteed to the City by the manufacturers for a period of not less than one (1) year, unless otherwise indicated, following the date of acceptance of the signal installation of such equipment. If any part(s) is found to be defective in materials or workmanship within the one-year period, and it is determined by the Electrical Superintendent, or by an authorized manufacturer's representative, that said part(s) cannot be repaired on the Site, the manufacturer shall provide a replacement part(s) of equal kind and/or type during the repair period and shall be responsible for the removal, handling, repair or replacement and reinstallation of the part(s) until such time as the traffic signal or Street lighting equipment is functioning as specified and as intended herein; the repair period shall in no event exceed 72 hours, including acquisition of parts.

The one-year guarantee on the repaired or replaced parts shall again commence with the date of reassembly of the system.

All Work done by the Contractor shall be guaranteed in writing to the City CM Engineer for the 12 months from the date of acceptance.

23-1.5 Maintaining Existing and Temporary Electrical Systems

Existing traffic signal systems, including detection, and/or safety lighting, shall remain operational during construction, unless otherwise authorized in writing by the City Engineer.

The Contractor shall notify the City CM Engineer at least one full working day (not less than 24 hours) prior to the shutdown of any traffic signal and lighting system. The Contractor may use temporary splices and wiring as approved by the City CM Engineer to maintain existing and temporary traffic signal and lighting systems. Shutdowns of traffic signal and lighting systems shall be limited to the period from 9

a.m. to 4 p.m. of normal working days, excluding legal holidays, weekends, and non-working days as determined by the City CM Engineer.

23-1.6 Scheduling of Work

Scheduling of Work shall conform to the provisions in Section 86-1.07, "Scheduling of Work," of the State Standard Specifications and these Specifications.

The Contractor shall notify the City CM Engineer at least one working day in advance of any electrical work and also at least one working day in advance of any Work done intermittently to facilitate inspection.

23-1.7 Foundations

Foundations shall conform to the provisions in Section 86-2.03, "Foundations," of the State Standard Specifications and these Specifications.

Concrete for reinforced pile foundations shall contain not less than 564 pounds of cement per cubic yard.

Foundation concrete shall be placed in a single pour except that pouring of the top six inches may be postponed when prior approval has been obtained. Exact location for controller cabinet shall be designated by the Traffic Engineer and approved by Electrical Superintendent, 48-hour notice required.

No Utilities shall be permitted to run through any foundations.

PVC wire-ways in pole foundations shall be installed as detailed in City Standard Drawing No. E-27. Foundations shall be poured against undisturbed earth where practicable. The exposed portion shall be formed and finished to present a neat appearance. Where obstructions or other conditions prevent construction of planned foundations, the Contractor shall construct an effective foundation satisfactory to the City CM Engineer.

The bottom of concrete foundations shall rest on firm ground. When placing the foundations, the Contractor shall place all conduit ends in their proper position, at the correct heights and shall securely hold them in position during the pouring of concrete. Conduits exiting the controller foundation and entering into the controller cabinet shall be aligned to enter within the ~~tees~~ TEES specified cabinets without any modifications to the cabinet base. Conduit shall be capped before any concrete is poured. Both forms and earth to be in contact with foundations shall be thoroughly moistened before placing concrete.

Anchor bolts shall be galvanized and shall extend above the finished base as needed to ensure a minimum extension above the top nut of 3 threads. The maximum extension above the top nut is 1 inch. Each bolt shall be supplied with 2 nuts and 2 flat washers to facilitate leveling. The distance between the bottom nut and the top of the finished foundation shall vary depending on the diameter of the anchor bolt being used. For anchor bolts 1" or less in diameter this distance is 1" minimum and 1-1/2" maximum. For anchor bolts greater than 1" in diameter the distance is 1-1/2" minimum and 2" maximum.

The anchor bolts and conduits shall be held in place by means of a template until the concrete sets.

Locations shown on the Plans are schematic.
Poles, standards and pedestals shall not be erected until the foundation concrete has set at least seven Days and shall be plumbed or raked as directed by the City CM Engineer. Top of concrete foundations shall be finished relative to curb or sidewalk grade or as shown on the Plans or as directed by the City CM Engineer.

The top of controller cabinet foundation shall be 12 inches above the surrounding grade or sidewalk, as shown in Dwg. E-37.

23-1.8 Standards, Steel Pedestal and Posts

Standards, steel pedestals and posts shall conform to the provisions in Section 86-2.04, "Standards, Poles, Steel Pedestals and Posts," of the State Standard Specifications and these Specifications.

If relocation of Utilities is required, immediate notification shall be given to the appropriate Utility company by the Contractor.

The Contractor may install all underground electrical components, including foundations for signal standards and controller cabinet at the site of the project; however, no traffic signal standards shall be erected until all controlling equipment is available to the Contractor for installation.

All nuts, washers, screws and other post hardware shall be galvanized.

23-1.9 Conduit

Conduit shall conform to the provisions in Section 86-2.05, "Conduit," of the State Standard Specifications and these Specifications.

Nonmetallic-type conduit shall not be used, unless specifically called for on Plans, with the exception of conduits between standards and adjacent pull boxes which shall be installed per City Standard Drawing No. E-27.

Conduit shall be of rigid type, conforming to Article 346 of the National Electrical Code. All conduit and fittings shall be hot dip galvanized. Each length shall bear the labels of Underwriters Laboratories, Inc. Installation shall conform to appropriate Articles of the Code.

All couplings shall be tightened to provide a good electrical and mechanical connection throughout the entire length of the conduit run. The use of threadless or set screw fittings is not allowed. No running threads are permitted.

Conduit threads and damaged conduit surfaces on metal conduit shall be thoroughly painted with zinc rich paint conforming to Military Specification DOD-P-21035A.

All conduit ends shall be threaded and capped with standard conduit caps until wiring is started. When the caps are removed the threaded ends shall be provided with

approved insulated hot dipped galvanized malleable iron bushings with cast integral lay-in lugs.

It shall be the privilege of the Contractor, at his/her own expense, to use larger size conduit if desired, and where larger size conduit is used, it shall be for the entire length of the run from outlet to outlet. No reducing couplings will be permitted.

All conduit shall be laid to a depth of not less than twenty-four inches, nor greater than thirty-six inches below the curb grade in the sidewalk areas and from the finished surface in Street areas. Conduits in sidewalk areas parallel to the curb shall not be installed more than twenty-four inches from inside of curb line toward property line.
Conduit shall be placed under existing pavement by directional boring and jacking method. Pavement shall not be disturbed without the written permission of the City CM Engineer and then only in the event insurmountable obstructions are encountered. Conduits not able to be placed under sidewalk shall be encased in at least 6” of slurry. Excessive use of water, such that pavement might be undermined, or subgrade softened, will not be permitted.

Conduit in pull boxes shall not extend more than two inches inside the box wall. No conduit may enter the pull box from the bottom unless approved by the City CM Engineer. No conduit or Utility shall pass through a signal, controller or Street light base or pull box except the conduit which terminates within the base or pull box.

No 90º elbows shall be installed unless specified or approved by City of Fresno, Construction Management.

After the installation of all conductors and cables, the ends of conduits terminating in pull boxes, the controller cabinet and service pedestal shall be sealed with an approved duct seal material. In as much as possible, conduit shall be run in a straight line from one pull box or pole to the next, maintaining a consistent setback from the curb. Any variation from this requirement shall be approved by the City CM Engineer.

23-1.10 Pull Boxes

Concrete pull boxes shall conform to the provisions in Section 86-2.06, "Pull Boxes," of the State Standard Specifications and these Specifications.

All pull boxes shall be No. 5 unless otherwise noted on the Plans. See Section 86-2.06 of the State Standard Specifications and City Standard Drawing No. E-4 regarding requirements for grouting, drain hole, etc.

All pull boxes shall be installed with extensions.

The pull box lid at the Pacific Gas & Electric Company's point of connection shall be marked "PG&E." All others shall be inscribed "Traffic Signal," “Interconnect,” “Electrical” or "Street Lights" as appropriate.
Pull boxes on long runs shall be installed and spaced at not over 200-foot intervals, and shall be required in all conduit change of directions.
All pull boxes shall be wrapped with building paper prior to backfilling. Pull boxes installed in non-concrete areas shall be surrounded by a one (1) foot wide concrete

collar and to a depth equal to the pull box and extension. The collar shall be sloped to drain away from the pull box.

Vandal resistant locking lids shall be installed by the contractor at final inspection. Contractor shall provide temporary lids during construction. Locking lids shall be galvanized steel diamond plate, minimum thickness 3/16 inches, with minimum two (2) clamping jaws and be keyed to the City of Fresno key.
For concrete fiber optic vaults, refer to Section 31, “Technical Specifications for Intelligent Transportation Systems,” of the City Standard Specifications.

23-1.11 Conductors and Wiring

Conductors and wiring shall conform to the provisions in Section 86-2.08, "Conductors and Cables," and Section 86-2.09, "Wiring," of the State Standard Specifications and these Specifications.

All 7-conductor, 5-conductor and 3-conductor cables shall conform to the latest International Municipal Signal Association (IMSA) Specification 20-1. The cable conductors shall be 14 AWG solid copper.

When cables are pulled into the conduit, all ends of the cables shall be taped to exclude moisture, and shall be so kept until connected to terminals.

A minimum of three feet of slack in each single conductor and cable run shall be left at each signal or lighting standard and in each pull box.

No splices shall be allowed in multi-conductor cables. They shall run from the controller terminal strip to the appropriate TS-4 terminal block. (Delete the paragraph under number 5 in Section 86-2.09D, "Splicing and Terminations," of the State Standard Specifications which permits splicing of underground conductors.)

All single conductor wire shall be copper and of stranded construction with THWN type insulation. All conductors shall have insulation colors appropriate to their use and all applicable codes. The use of colored phase tape is not allowed.

Splices in single conductor wire shall be limited to the load side of the service pedestal breakers and to tap type splices located in pull boxes. These splices shall be made using either split bolts or c-tap connectors. The c-taps shall be properly sized for the wires being joined and installed with the proper tooling. The splice shall be insulated as follows: minimum 2 layers of rubber tape, 1 layer--½ lapped plastic tape, 1 layer friction tape and then coated with an approved electrical sealing compound.

Pedestrian push button circuits shall utilize a 3-conductor cable between the controller and a pedestrian TS-4 terminal assembly. The individual buttons shall be connected to the terminal assembly using DLC. At the pushbutton end, the conductors shall be attached using an insulated fork terminal properly sized for the wire and screw. At the terminal assembly end, the wire shall be stripped, loose strands of individual conductors twisted neatly and soldered prior to installation into the box type pressure connector. Reference City Standard Drawing No. E-20.

Conductors within the 3, 5 and 7 conductor cables shall be connected within the terminal assemblies as shown on the "Terminal Location," City Standard Drawing Nos. E-19 and E-20.

The single conductor #14 AWG THWN stranded copper wire installed between the TS-4 terminal block and the individual signal heads terminal block shall be terminated as follows:

At the signal head end, it will be installed using an insulated spade terminal properly sized for the wire and the screw. The terminal shall be installed using the proper tooling. At the terminal assembly end, the wire shall be stripped, loose strands twisted neatly and tinned with solder prior to installation into the box type pressure connector.

All multi-conductor cable conductors connected to the load bay shall be terminated at the controller cabinet using the AMP/TYCO 320359 spade terminals.

All multi conductor cable conductors connected to the input terminal blocks shall be terminated at the controller cabinet using a fork terminal properly sized for the wire and the screw.

The lugs used to connect with controller field terminals shall be soldered after being properly crimped. Soldering shall be by means of an iron or gun. No open flame torch may be used.

Optical Detector Cable shall meet the requirements of IPCEA-S-61-402/NEMA WC5, Section 7.4, 600 volt control cable, 75°C., Type B, and the following:

(a) The cable shall contain 3 conductors, each of which shall be No. 20 (7x28) stranded, tinned copper with low-density polyethylene insulation.

Minimum average insulation thickness shall be 25 mils. Insulation of individual conductors shall be color coded: 1-yellow, 1-blue, 1-orange.

(b) The shield shall be either tinned copper braid or aluminized polyester film with a nominal 20 percent overlap. Where the film is used, a No. 20 (7x28) stranded tinned, bare drain wire shall be placed between the insulated conductors and in contact with the conductive surface of the shield.

(c) The jacket shall be black polyvinyl chloride with a minimum rating of 600 volts and 80° C (176°F) and a minimum average thickness of 45 mils. The jacket shall be marked as required by IPCEA/NEMA.

(d) The finished outside diameter of the cable shall not exceed 10 mm (0.35 inch).

(e) The capacitance, as measured between any conductor and the other conductors and the shield, shall not exceed 48 picofarads per foot at 1,000 Hz.

(f) The cable run between each detector and the controller shall be continuous without splices or shall be spliced only as directed by the detector manufacturer and approved by the City.

23-1.12 Fused Splice Connectors

Each luminaire shall be internally fused with an OEM fuse holder and a 5 amp fuse or with a 5 amp KTK type fuse installed in a TRON HEB type fuse holder. The fuse and holder shall be located in the luminaire. Sufficient slack shall be provided to allow easy changing of the fuse as needed. The fuse holder shall be crimped to the wire and the crimp joints insulated as described above for tap type splices.

23-1.13 Bonding and Grounding

Bonding and grounding shall conform to the provisions in Section 86-2.10, "Bonding and Grounding," of the State Standard Specifications and these Specifications.

Ground will be obtained by installation of a ground rod within the service pedestal foundation. This ground rod shall be bonded to all metallic conduits within the controller cabinet and all pull boxes shall be bonded in a similar manner. Within the service pedestal, controller cabinet and pull boxes adjacent to signal standards, one end of the solid #8 bonding conductor shall be extended to and attached to the pedestal, controller cabinet or signal standard using the grounding point as furnished. For signal standards not supplied with a hand hole, the grounding conductor shall be terminated on an anchor bolt between two washers installed above a leveling nut.

A green #8 stranded wire may be used for pole grounding if a ring terminal, appropriately sized for the grounding bolt, is installed.

All ground connections shall be left visible and accessible until the final acceptance inspection is complete.

To ensure proper ground distribution, a #8 stranded copper conductor with green THWN insulation shall be installed in all conduits. The ends shall be attached to the bonding jumper at each end using split bolt or c-tap splices.

23-1.14 Testing

Testing shall conform to the provisions in Section 86-2.14, "Testing," of the State Standard Specifications and these Specifications.

When controller equipment is not supplied by the City, the Contractor shall provide the controller equipment to Traffic Signal Maintenance, 2101 'G' Street, Building E, Fresno, CA 93706. Ten working days will be allowed for testing and programming of the controller equipment.

Note: Refer to these Specifications regarding Controllers, Cabinets and Ancillary devices.
The controller equipment shall be capable of passing the "self-evaluation program" utilized by the City.

Should any equipment fail to pass or be rejected as not complying with the Specifications, the Contractor shall remove said equipment within 3 working days after Notice of rejection is given. Should the equipment fail to be removed, it may be removed by City and shipped to the Contractor at his/her expense.

The Contractor shall allow ten working days for evaluation, testing and programming of all replacement equipment. The ten working days will start when the new equipment is delivered to the City.

The cost of all retesting and evaluation shall be the responsibility of the Contractor.

23-1.15 Painting

All paint shall be furnished and applied by the Contractor. Minor touch-up painting on all material whose surface is damaged or not protected from rusting shall be painted as directed by the City CM Engineer. Cold galvanized zinc-rich paint, Military Specifications DOD-P-21035 A, shall be used on all damaged galvanized surfaces.

When allowed, any reused pedestrian and vehicle signals, visors, and backplates shall be repainted to match new equipment. Painting shall conform to the provisions of Section 86-2.16, "Painting," of the State Standard Specifications.

23-1.16 Service

Service shall conform to the provisions in Section 86-2.11, "Service," of the State Standard Specifications and these Specifications. Electrical service pedestal installation and wiring shall be as detailed in City Standard Drawing Nos. E-15 and E-17. The underground conduit between the service pedestal and the P.G. & E. point of service shall be galvanized rigid conduit.

23-1.17 Signal Faces and Signal Heads

Signal faces, signal heads and auxiliary equipment as shown on the Plans, and the installation thereof, shall conform to the provisions in Section 86-4, "Traffic Signal Faces and Fittings," of the State Standard Specifications and these Specifications.

All signal sections shall be provided with 12” (300mm) diameter Light Emitting Diode (LED) modules conforming to the requirements of the Institute of Transportation Engineers (ITE) publication ST-017B and listed in the Qualified Products List (QPL). Green LED modules shall have clear lenses.

Visors on vehicular signals shall be "tunnel" type with open slot at bottom.
All signal heads, visors, and backplates shall be metallic. Signal heads shall be painted gloss dark green and backplates shall be painted flat black. Visors may be either black or green.

Backplates shall be provided for all signal heads except on median mounted lower left turn signal.

Mounting framework shall consist of 1.5" steel pipe, ductile iron fittings, and bronze terminal compartments. Slipfitter attachments, MAS/MAT, shall be bronze. After installation of the signal mounting framework, any through bolts that extend more than 1" beyond the nut shall be cut to three threads beyond the nut and painted with a zinc rich cold galvanizing compound.

All set screws exposed to weather shall be zinc, stainless steel or cadmium plated and have square heads.

When a mast arm is not equipped with a mid-tenon, the Contractor shall provide a City approved Signal Mounting Bracket to install the MAS signals. The standard bracket is supplied with 29" mounting bands. Longer lengths are available and may be needed depending on the particular mast arm used. The bracket shall be installed using the manufacturers detailed installation instructions. Prior to mounting the bracket, the Contractor shall drill a 1" diameter hole in the mast arm corresponding to the desired signal placement. All burrs and sharp edges shall be removed. The area will be cleaned of any oil or drilling compound. A zinc-rich cold galvanizing compound will be applied to the bare metal. A 1" grommet will be installed in the drilled hole to protect the wiring. After the bands are adjusted and tightened, the tenon shall be marked and drilled to accept the MAS through bolt. After mounting and plumbing of the signal, the set screws shall be secured.

Traffic Signal Head Modules (LED'S) shall conform to Section 86-4.02, "Programmed Visibility Vehicle Signal Faces," of the State Standard Specifications, the State Department of Transportation QPL, and to City requirements. Green LEDs to have clear lens only.

23-1.18 Pedestrian Signals

Pedestrian signals shall conform to the provisions in Sections 86-4.03, "Pedestrian Signal Faces" and 86-4.04, "Signal Mounting Assemblies," of the State Standard Specifications and these Specifications.

Pedestrian signals shall be Type A. International type symbols shall be used.

All pedestrian signal housings shall be metallic. The lenses and egg crate type visors shall be polycarbonate.

Mounting framework shall consist of 1-1/2" steel pipe, ductile iron fittings and bronze terminal compartments.
Clam shell mounting hardware shall not be used.

After installation of the signal mounting framework, any through bolts that extend more than 1" beyond the nut shall be cut to three threads beyond the nut and painted with a zinc rich cold galvanizing compound.

All set screws exposed to weather shall be zinc or cadmium plated and have square heads.

The signal shall have an LED Hand and White Walking Man with a countdown feature.

When allowed, reused pedestrian signals shall have an LED retrofit kit installed. The installation shall not require any special tools or the drilling of any holes in the reflector or housing. If existing pedestrian housing will not accommodate an LED retrofit kit, the Contractor shall furnish and install a new pedestrian housing.

The luminous intensity, quantity and color of the LEDs shall be such that the intent of the current ITE specification for Pedestrian Traffic Control Signal Indications is satisfied.

23-1.19 Detection

Detectors shall be supplied by an approved manufacturer and conform to provisions in Section 86-5, "Detectors," of the State Standard Specifications and these Specifications.
Pavement saw cut detector loop wire shall be type 2.

Loop Detector Lead-in Cable (DLC) shall be Type "C" IMSA spec. 50-2. Cable shall not be spliced between the termination pull box and the controller terminals.

DLC drain wires shall be terminated in the cabinet as individual wires (Not twisted into groups) to allow for ease of future relocation.

Loops in adjacent lanes shall be polarized and the loop conductor ends identified as detailed in State Standard Drawing, ES-5A note #8 and the ‘winding Details’.

Loops locations shall be per City Standard Drawing No. E-14.

The loop wire when spliced to the lead-in cable shall be insulated using Method ‘C’ Handcrafted Insulation or by using approved heavy wall shrink tubing. All splices shall be made using uninsulated inline connectors, crimped and soldered.

Resistance: max = 0.51 + 0.35Ω/c of DLC.
Insulation: min = 100 meg Ω.

The loop test measurements as detailed in the State Standard Drawing, ES-5A note # 17, shall be documented on the “Detector Loop Test Results” form provided in the controller cabinet and a copy is provided at the end of these Specifications. The form will be signed and dated by the individual performing the tests.

The sealant for filling slots shall be ELASTOMERIC SEALANT or HOT-MELT RUBBERIZED ASPHALT SEALANT, and shall conform to State Standard Specification Section 86-5.01A (3), “Construction Materials.”

23-1.20 Pedestrian Push Buttons

Pedestrian push buttons shall conform to the provisions in Section 86-5.02 "Pedestrian Push Button Assemblies" of the State Standard Specifications and these Specifications.

Pedestrian push buttons shall meet or exceed the 2010 Americans with Disabilities Act Standards for Accessible Design as specified in The Federal Register, as printed on September 15, 2010.
Pedestrian push buttons, housing and sign shall be pre-approved by the City CM Engineer.

Pedestrian push buttons shall be Type "B" with sign and housing. Housing shall be metallic and sign shall be international symbol and arrow. Push buttons shall be 2" diameter.
The housing shall be sized to conform closely to the curvature of the pole.

The DLC shall be connected to the pushbutton using an insulated fork connector. At the TS-4 terminal assembly, the loose strands shall be tightly twisted together and tinned with solder.

23-1.21 Audible Pedestrian Signal Specification

When specified, the contractor shall furnish and install an Accessible (Audible) Pedestrian Signal (APS) system (2-wire Polara Navigator or approved equal) in conformance with the city's Standard Specifications. The APS shall provide both a vibrating arrow button and audible sounds during the "Walk" interval as well as a locating tone during the pedestrian clearance and don't walk intervals. The APS shall meet current ADA and MUTCD requirements.
The contractor shall supply the latest means of programming the APS system to the City of Fresno TSSL department.

23-1.22 Emergency Vehicle Priority Control System

The priority control system shall offer the capability of identifying two levels of priority vehicles at signalized intersections and one level of probe vehicle. High priority for emergency vehicles and low priority for other authorized users will request the traffic signal controller to advance to and/or hold a desired traffic signal display selected from phases normally available. A Probe Vehicle Mode must be available for traffic engineering, run time analysis and response time data gathering. The probe vehicle mode will not preempt the traffic signal. The Probe Mode will record of the probe vehicle's presence at a Priority Controlled intersection. The system will only allow users with flash rates of 14.0359Hz +/-0.05% for high priority and 9.63855Hz +/-0.05% for low priority activation of the system. The system shall also be capable of identifying up to 10,000 individual vehicles by the coded light signal of the vehicle emitter for security and vehicle logging.
The system will have non-authorized vehicle control with the capability of only allowing use of the system to authorized users with valid identification codes. The system must be fully compatible with existing vehicle emitters currently installed on City-owned fire apparatus, and City-owned signalized traffic signals, as well as contractually obligated mutual aid providers.

The system will record up to 1000 activations, on a continuous basis. The latest preemption will replace the oldest preemption. The system must record the date and time of the preemption, the duration of the preemption, the direction from which the call was received, the vehicle identification number (class and ID), intersection name, log entry number, priority of vehicle and duration of call. Further, the system must record approximate distance of each emitter recorded during last moment of detection. This data is to be recorded in the phase selector located inside the cabinet. Information is to be easily accessible via RS232 port and software. The phase selector shall also have the capability to assign a relative priority to a call request within high or low priority based on the received vehicle ID class.

The system shall offer automated signal intensity threshold settings. Activation range to be set by downloading a code through the software and by using a combination of the software and a special range setting emitter. The system range shall be capable of precise settings using 1200 increments; and actuating between 100 feet and up to 2500 feet passage of 8 separate emergency vehicles, individually approaching the test intersection. Each equipped emergency vehicle will be required to activate the test intersection at 1800 feet with a variance of 100 (+-) feet. The system must be able to set separate ranges on any detector; one for low priority and one for high priority.

The system will be a matched component system with all components from one manufacturer consisting of:

- A Data-Encoded Emitter. The data-encoded emitter will trigger the system. It will send the infrared signal to the detector. It will be located on the priority or probe vehicle.
- Phase Selectors to be located in the controller cabinet with green sense harnesses wired into the traffic controller per manufacturer specifications. Phase selectors shall have two channels.
- Detector cable with four conductors yellow, blue, orange and bare.
- Vehicle detectors shall be dual input single output.

The system shall offer the capability of detector diagnostics through connecting a lap top computer to the phase selector and reading electrical line noise between the traffic signal cabinet and detector mounted in the intersection. System must display information, such as optical noise levels, so as to confirm proper operation of detector and therefore reduce inspection time and effort.

All EVP system equipment submitted to the City must include a certificate of product liability insurance protection of at least $5,000,000.00.

Detectors shall be mounted with an Astro-Mini-Brac, or other approved bracket, on the traffic signal mast arm and aligned with the number one through traffic lane. Prior to mounting the bracket, the contractor shall drill a 1” diameter hole in the mast arm at the desired bracket location. All burrs and sharp edges shall be removed. The area will be cleaned of any oil or drilling compound and a zinc-rich cold galvanizing compound will be applied to the bare metal. A 1” grommet will be installed in the drilled hole to protect the wiring.
Phase selectors shall be a two channel type. (Opticom 762 or approved equivalent.)

23-1.23 Luminaires

Luminaires shall conform to the provisions in Section 86-6.02, “LED Luminaires;” of the State Standard Specifications and these Specifications.

The luminaires shall be of the “cobra-head” type, 120V light emitting diode (LED) as approved and specified in the City of Los Angeles, Department of Public Works, Bureau of Street Lighting, High Pressure Sodium Equivalent Chart for 150, 200 or 250 watt.

Luminaires shall be internally fused with a 5 amp fuse.

After installation and plumbing of the pole, the luminaire shall be leveled on both the long and transverse axis by use of spirit level.

If the service pedestal is equipped with a lighting contactor and no master photo control is installed, the Contractor shall install one atop the traffic signal mast arm pole adjacent to the service pedestal or atop the nearest streetlight pole. The master photo control shall be wired back to the service pedestal using three #12 AWG stranded copper wires color matched to the PEC. The PEC will be mounted using hardware manufactured for that purpose or fabricated and approved by the Electrical Superintendent.
All streetlights and safety lights fed from a pedestal equipped with a contactor shall be switched by that contactor and their PEC’s replaced with shorting caps.

The street light numbers shall be installed on the poles using minimum 2 1/2" high numerals in accordance to City Standard Drawing No. E-25. Numbers shall be adhesive backed Almetek PS-2.5 or approved equivalent. The numbers shall be black on a contrasting background. Pole numbers shall be shown on the as-built plans.

23-1.24 Barrier Posts

Will not be used on this project.

23-1.25 Signal Turn-On Requirements

1. The Traffic Engineer, TSSL Supervisor, and the City Traffic Operations Center Chief shall be notified in writing, seven (7) working days in advance of proposed turn-on.

2. All turn-ons will have a pre-inspection one (1) day prior to turn-on.

3. All wiring shall have passed the test for shorts and continuity. Detector loops shall have been "Meggered" and meet Specifications.
4. All "field" connections shall be made and verified, including the pedestrian push buttons and the vehicular and pedestrian signal heads.

5. All signal heads shall be properly aimed as directed by the City CM Engineer.

6. All signal poles and heads shall have been in place a minimum of seven (7) Days.

7. All auxiliary functions (e.g., safety lights, etc.) shall be operational.

8. The "service" shall be complete, including the utility company meter.

9. All signing and striping (including sign removal) shall be in place before signal can be turned on.

When all of the above are complete and the intersection ready for turn-on, the Contractor shall notify the City CM Engineer. The City CM Engineer will then arrange with the Electrical Superintendent to meet with the Contractor at the Site to perform an initial inspection of the installation. If satisfactory, the signal may be placed in operation. Any items needing additional Work or correction will be listed and that list provided to City Construction Management and the Contractor. City Construction Management will ensure that these items are corrected as needed. The initial turn on shall be made between 9:00 a.m. and 2:00 p.m. unless otherwise specified. Functional tests shall start on any working day except Monday, Friday or the Day preceding a legal holiday. The Contractor is cautioned not to attempt turn-on prematurely. **Time spent by the City's Traffic Signals and Streetlights staff at the Site in excess of two hours due to Work not completed by the Contractor prior to turn-on will be paid by the Contractor. Any inspections in excess of 2 re-inspections after a punch list has been generated will be paid by the Contractor.**

23-1.26 Traffic Control

Traffic control shall be provided in accordance with State of California, "Manual of Traffic Controls," latest Caltrans adopted edition.

A traffic control plan shall be provided in accordance with State of California, "Manual of Traffic Controls," latest Caltrans adopted edition.

Payment shall be included in lump sum bid for signals and lighting.

23-1.27 Payment

Payment for new signals, lighting and modifications shall conform to the provisions in Section 86-8, "Payment," of the State Standard Specifications and these Specifications.

The Contract Price shall include traffic signal and safety lighting and no additional payment will be allowed.

23-2 TRAFFIC CONTROLLERS, CABINETS AND ANCILLARY DEVICES

23-2.1 General

a) It is the purpose and intent of these Specifications to describe the minimum requirements for traffic signal controllers, cabinets, and other ancillary devices to be used by the City Traffic Engineering and Street Maintenance Divisions.

b) All items not specifically mentioned which are required for a complete 8-phase unit shall be included in the unit.

c) All equipment and accessories to be furnished must be new and in current production. All products shall conform in design, strength, quality of material and workmanship to current industry standards.

d) Each item shall be accompanied by two (2 sets) of the manufacturer's illustrated descriptive literature and specifications. A copy of the manufacturer's standard warranty shall also be attached to the equipment.

All equipment and accessories shall comply with:

- Regulations of the Federal Occupational Safety and Health Administration (OSHA) and/or the California Occupational Safety and Health Administration (Cal/OSHA), whichever is more restrictive.

- Title 49, Code of Federal Regulations, Chapter III, Federal Highway Administration Department of Transportation.

- California Vehicle Code.

- State Standard Specifications, the most recent Traffic Signal Control Equipment Specifications, and all subsequent addenda.

<u>Technical Specifications:</u>

All material and equipment supplied must comply with the State Standard Specifications, except for those exceptions allowed herein, and must be manufactured by companies on CALTRANS' Qualified Products List (QPL). The most recent QPL will be the list used to determine the qualification of the products offered. Any submittal with any products not on the QPL will be rejected. Any changes occurring in subsequent QPL's shall be considered in effect on all subsequent orders.

<u>Model 2070L Controller Assemblies:</u>

New Model 2070L controller assembly or assemblies shall be furnished by the Contractor, as shown on Plans, and shall conform to Section 86-3.01A, "Controller assemblies," of the State Standard Specifications and all addenda thereto, current at the time of project advertising, and these Specifications.

The Contractor shall provide the Model 2070L unit as a complete, operational assembly, with local intersection-control software that is 100% compatible with current City Traffic Operations Center software and can be fully integrated into the City Traffic Operations Center without any additional hardware or software, pre-installed in the controller. The software license registration sticker shall be attached alongside the hardware serial number plate inside the front panel.

The controller shall be the "lite" version Model 2070L (California Transportation Department Rack Mount type) ATC traffic controller per State Standard Specifications, shall conform to the Transportation Electrical Equipment Specifications (TEES) Errata 2. The controller shall be equipped with the following modules:

- 2070-1B CPU with 8MB RAM, 10MB Ethernet Port, Data key
- 2070-2A I/O Module for 332 cabinets
- 2070-3B 8x40 Line Display and dual keyboard panel
- 2070-4B Heavy-Duty 3A Power Supply Module
- 2070-7A Dual Serial Port Card, RS-232
- OS-9 Microware OS9 v3.2 or higher operating system

332L Cabinet:

Shall meet all California Transportation Department and Federal Highway Administration requirements. The Model 332L Cabinets shall be anodized aluminum (0.125" thick).

The 332L cabinet suppliers shall be qualified 332L suppliers.
The cabinet shall include the power supply, two Model 204 flashers, all necessary relays, the Conflict Monitor, a red interface adaptor, a thermostatically controller fan, a door switch operated fluorescent light, a slide out shelf/drawer storage unit and four anchor bolts. All crimp type terminals between the Lower Input Panel and the Input files shall be soldered. For matching purposes, the City will accept the Corbin 3-point locking system lock, which shall be keyed alike to the City Standard Specifications, (No Substitutions).

Model 332L Traffic Signal Controller Cabinet Modifications:

Modify to City Standard Drawing No. E-34A for preemption and E-34B for the C-11 cable connections. Upgrade service panel Traffic Signal circuit breaker to 40A. Upgrade signal bus circuit breaker to 30A, flasher breaker to 15A and label PDA #2L breakers accordingly. Furnish and install any and all equipment for proper operation of traffic signals and cabinet as described in this Section 23-2 of the City Standard Specifications.

200 Load Switch:

The load switch is a tri-pack, modular, solid state relay designed specifically to meet NEMA specifications, as well as California and New York Model 200 specifications. Each load switch contains 3 individually replaceable modules that are enclosed in a dust resistant metal enclosure. The load switch shall integrate with the Model 332 cabinet output file as well as with any NEMA loadbay. Quantities shall be supplied for an 8-phase operation. 12 shall be required installed at time of delivery.

222 Two Channel Loop Monitor:

The loop inputs incorporate lightening and transient protection devices and the loop oscillator circuitry is transformer isolated. The lightening protection will withstand the discharge of a 10uF capacitor charged to 2,000V across the loop inputs or between any loop input and earth ground. The transformer isolation allows operation with loops which are grounded at a single point. 22 shall be required installed at time of delivery.

242 Two-Channel D.C. Isolator:

Two-channel dual change (DC) Isolator is designed to comply with CALTRANS Model 242 specifications. Each channel of the D.C. Isolator shall present a true signal (ground closure) at the input voltage of less than 8 VDC, for longer than 5 milliseconds. The D.C. Isolator shall integrate with the model 332 cabinet input file. 3 shall be required installed at time of delivery.

204 Flasher Unit:

The flasher unit shall integrate with the model 332 cabinet. It has a dual circuit flasher designed for the traffic control industry, specifically to meet the CALTRANS Model 204 specifications. This unit is rated up to a 15 A per circuit. The flash rate is 56.25 flashes per minute and does not vary due to voltage or temperature variations. Two shall be required installed at time of delivery.

Conflict Monitor 2010ECL Series + features:

The Conflict/Voltage Signal Monitor unit is exempt from QPL qualification and shall be a Model 2010ECL, as manufactured by Solid State Devices or Eberle Designs Inc. The interface for the conflict/voltage signal monitor shall be installed in the cabinet output file at the factory per the conflict/voltage signal monitor manufacturer's instructions. The unused channel programming of the interface shall be configured for full quad 8-phase operation. Modification of the programming shall be possible without the use of any tools. For conflict monitors ordered as individual units, the interface provided shall be the monitor manufacturer's generic interface complete with all cables and hardware necessary to provide complete operation of the monitor. Conflict Monitor shall be installed at time of delivery.

Testing:
Prior to installation the Contractor must be able to deliver to the City facilities for testing and inspection all equipment. The controllers, cabinets and ancillary devices will be evaluated for performance. The Model 2070L controller must pass the City diagnostic test. The City diagnostic is essentially identical to the CALTRANS Diagnostic and Acceptance Test Program, version 2.4, dated 1/04/95. The purpose of the testing is to ensure that the equipment will work in the field, and as stated above meet all requirements.

The City reserves the right during the testing process to contact the Contractor for additional information. Any equipment found to be defective will be rejected and shall be replaced by the Contractor within 30 Days of the date of notification by the City and at no cost to the City. Testing of replacement equipment will be at the Contractor's expense. Any equipment not approved by the City because of testing failure shall be

picked up by the Contractor at the Contractor's expense. The Contractor shall have 48 hours to remove equipment failures after notification by the Electrical Superintendent. The City will not accept or have installed any rejected equipment.

Approved Manufacturer Equipment and Brands

Controllers:

Naztec 2070L

Cabinets and Ancillary Devices:

Precision Design Company (PDC)
Eberle Design Inc. (EDI)
Solid State Devices
McCain Traffic Supply
Traffic Safety Supply
Safetran Traffic Systems, Inc.
Global Traffic Technologies (GTT)
Polara Engineering
Reno A&E

Detector Loop Test Results

Location: _____ Int. # _____

Tested By: _____ Date: _____

✓	Movement	Ø	Det. Slot	TB #	Term #	Loop Ω	Insulation Meg Ω	✓	Movement	Ø	Det. Slot	TB #	Term #	Loop Ω	Insulation Meg Ω
	NBLT-1-CT	1	I1U	2	1-2				SBLT-1-CT	5	J1U	3	1-2		
	NBLT-2-CT	1	I1L	2	3-4				SBLT-2-CT	5	J1L	3	3-4		
	SB Far	2	I2U	2	5-6				NB Far	6	J2U	3	5-6		
	SB Near	2	I2L	2	7-8				NB Near	6	J2L	3	7-8		
	SB-3-CT	2	I3U	2	9-10				NB-3-CT	6	J3U	3	9-10		
	SBRT	2	I3L	2	11-12				NBRT	6	J3L	3	11-12		
	SB-1-CT	2	I4U	4	1-2				NB-1-CT	6	J4U	5	1-2		
	SB-2-CT	2	I4L	4	3-4				NB-2-CT	6	J4L	5	3-4		
	EBLT-1-CT	3	I5U	4	5-6				WBLT-1-CT	7	J5U	5	5-6		
	EBLT-2-CT	3	I5L	4	7-8				WBLT-2-CT	7	J5L	5	7-8		
	WB Far	4	I6U	4	9-10				EB Far	8	J6U	5	9-10		
	WB Near	4	I6L	4	11-12				EB Near	8	J6L	5	11-12		
	WB-3-CT	4	I7U	6	1-2				EB-3-CT	8	J7U	7	1-2		
	WBRT	4	I7L	6	3-4				EBRT	8	J7L	7	3-4		
	WB-1-CT	4	I8U	6	5-6				EB-1-CT	8	J8U	7	5-6		
	WB-2-CT	4	I8L	6	7-8				EB-2-CT	8	J8L	7	7-8		
	NBLT	1	I9U	6	9-10				SBLT	5	J9U	7	9-10		
	EBLT	3	I9L	6	11-12				WBLT	7	J9L	7	11-12		
	-Far-2		I10U	10	5-6				-Far-2		J10U	10	9-10		
	-Far-3		I10L	10	7-8				-Far-3		J10L	10	11-12		
	SB Bike	2	I11U	10	1-2				NB Bike	6	J11U	10	3-4		
	WB Bike	4	I11L	8	2-3				EB Bike	8	J11L	9	2-3		

✓= Check active locations

Loop Ω = Ohmmeter reading across loop, in Ohms. (Max. 0.5Ω per loop + 0.65Ω per 100' #14 DLC or 1.05Ω per 100' #16 DLC)

Insulation Meg Ω = Megohm Meter reading, loop to ground @ 500 volts, in Megohms. (Min. 100 Meg Ω)

Rev. 06/20/13

Detector Loop Test Results

Location: _____ Int. # _____

Tested By: _____ Date: _____

✓	Movement	Ø	Det. Slot	TB #	Term #	Loop Ω	Insulation Meg Ω	✓	Movement	Ø	Det. Slot	TB #	Term #	Loop Ω	Insulation Meg Ω
		1	I1U	2	1-2					5	J1U	3	1-2		
		1	I1L	2	3-4					5	J1L	3	3-4		
		2	I2U	2	5-6					6	J2U	3	5-6		
		2	I2L	2	7-8					6	J2L	3	7-8		
		2	I3U	2	9-10					6	J3U	3	9-10		
		2	I3L	2	11-12					6	J3L	3	11-12		
		2	I4U	4	1-2					6	J4U	5	1-2		
		2	I4L	4	3-4					6	J4L	5	3-4		
		3	I5U	4	5-6					7	J5U	5	5-6		
		3	I5L	4	7-8					7	J5L	5	7-8		
		4	I6U	4	9-10					8	J6U	5	9-10		
		4	I6L	4	11-12					8	J6L	5	11-12		
		4	I7U	6	1-2					8	J7U	7	1-2		
		4	I7L	6	3-4					8	J7L	7	3-4		
		4	I8U	6	5-6					8	J8U	7	5-6		
		4	I8L	6	7-8					8	J8L	7	7-8		
		1	I9U	6	9-10					5	J9U	7	9-10		
		3	I9L	6	11-12					7	J9L	7	11-12		
			I10U	10	5-6						J10U	10	9-10		
			I10L	10	7-8						J10L	10	11-12		
		2	I11U	10	1-2					6	J11U	10	3-4		
		4	I11L	8	2-3					8	J11L	9	2-3		

✓= Check active locations

Loop Ω = Ohmmeter reading across loop, in Ohms. (Max. 0.5Ω per loop + 0.65Ω per 100' #14 DLC or 1.05Ω per 100' #16 DLC)

Insulation Meg Ω = Megohm Meter reading, loop to ground @ 500 volts, in Megohms. (Min. 100 Meg Ω)

Rev. 06/20/13

23-3 CITY SPECIFICATIONS FOR STREET LIGHTING

23-3.1 General

Furnishing and installing streetlights and payment therefore shall conform to the provisions in Section 86, "Electrical Systems," of the State Standard Specifications and the State Standard Drawings, most recent version; City Standard Drawing Nos. E-1 through E-36, as applicable; and the Specifications and the Plans.

Streetlight Work is to be performed at the locations shown on the Plans.

Existing electrical systems, or approved temporary replacements thereof, shall be kept in effective operation during the progress of the Work, except when shutdown is permitted.

Work or equipment not specified or shown on the Plans which is necessary for the proper operation of the Work in this section shall be provided and installed at no additional cost to the City.

The locations of foundations, poles, services, pull boxes and other appurtenances shown on the Plans are approximate. Exact locations and grades will be established as necessary by either the Traffic Engineer and/or engineer in the field.

23-3.2 Materials

Attention is directed to Section 6, "Control of Materials," of the State Standard Specifications and these Specifications.

All materials required to complete the Work under this contract shall be furnished by the Contractor.

The materials furnished and used shall be new, except such used materials as may be specifically provided for on the Plans.

All Work and materials shall be in full accordance with the latest rules and regulations of the National Board of Fire Underwriters, local and State laws and regulations, the State of California Industrial Accident Commission's Safety Orders, and Regulations of the Pacific Gas and Electric Company pertaining to service equipment and installations thereof. All Work shall comply with Section 11-104 of the City of Fresno Municipal Code, the National Electrical Manufacturer's Association Standards and all regulations and codes as stated in Section 86-1.02, "Regulations and Codes," of the State Standard Specifications. Nothing in these Plans and Specifications shall be construed to permit Work not complying with these codes.

23-3.3 Equipment List

Equipment list and drawing shall conform to the provisions in Section 86-1.04, “Equipment List and Drawings,” of the State Standard Specifications and these Specifications.

All equipment and materials that the Contractor proposes to install shall conform to these Specifications and the contract Plans. A list of substitute equipment and/or material, along with a written descriptive summary, describing the functions of the components which the Contractor proposes to install shall be submitted along with his/her Proposal. The list shall be complete as to the name of the manufacturer, size and identifying number of each item. The list shall be supplemented by such other data as may be required.

In all cases, the judgment of the Electrical Superintendent shall be final as to whether substitute equipment and/or material recommended by the Contractor conforms to the intent of these Specifications and is acceptable for use.

23-3.4 Warranties, Guarantees and Instruction Sheets

Warranties, guarantees and instruction sheets shall conform to the provisions in Section 6-3.06, "Guarantees," of the State Standard Specifications and these Specifications.

All equipment furnished shall be guaranteed to the City by the manufacturers for a period of not less than one (1) year, unless otherwise indicated, following the date of acceptance of such equipment. If any part(s) is found to be defective in materials or workmanship within the one-year period, and it is determined by the Electrical Superintendent, or by an authorized manufacturer's representative that said part(s) cannot be repaired on the Site, the manufacturer shall provide a replacement part(s) of equal kind and/or type during the repair period and shall be responsible for the removal, handling, repair or replacement and reinstallation of the part(s) until such time as the street lighting equipment, is functioning as specified and as intended herein; the repair period shall in no event exceed 72 hours, including acquisition of parts.

The one-year guarantee on the repaired or replaced parts shall again commence with the date of reassembly of the system.

All Work done by the Contractor shall be guaranteed in writing to the City CM Engineer for the 12 months from the date of acceptance.

23-3.5 Maintaining Existing and Temporary Electrical Systems

Existing lighting systems shall remain operational during construction, unless otherwise authorized in writing by the City Engineer.
The Contractor shall notify the City CM Engineer at least one full working day (not less than 24 hours) prior to the shutdown of any street lighting system. The Contractor may use temporary splices and wiring as approved by the City CM Engineer to maintain existing and temporary street lighting systems.

23-3.6 Scheduling of Work

Scheduling of Work shall conform to the provisions in Section 86-1.07, "Scheduling of Work," of the State Standard Specifications and these Specifications.

The Contractor shall notify the City CM Engineer at least one working day in advance of any electrical Work and also at least one working day in advance of any Work done intermittently to facilitate inspection.

23-3.7 Foundations

Foundations shall conform to the provision in Section 86-2.03, "Foundations," of the State Standard Specifications and these Specifications.

Portland cement concrete shall conform to Section 90-2, "Minor Concrete," of the State Standard Specifications and shall contain not less than 470 pounds of cement per cubic yard.

Foundation concrete shall be placed in a single pour except that pouring of the top six (6) inches may be postponed when prior approval has been obtained. All dirt and debris shall be cleaned from the top of the foundation prior to pouring the top 6”.

No utilities shall be permitted to run through a foundation.

Foundations shall be poured against undisturbed earth where practicable. The exposed portion shall be formed and finished to present a neat appearance. Where obstructions or other conditions prevent construction of planned foundations, the Contractor shall construct an effective foundation satisfactory to the City CM Engineer.

The bottom of concrete foundations shall rest on firm ground. When placing the foundations, the Contractor shall place all conduit ends in their proper position, at the correct heights and shall securely hold them in position during the pouring of concrete. The conduit ends shall be capped before any concrete is poured.

Both forms and earth to be in contact with foundations shall be thoroughly moistened before placing concrete.

Anchor bolts shall be galvanized and shall extend above the finished base as needed to ensure a minimum extension above the top nut of 3 threads. The maximum extension above the top nut is 1 inch. The distance below the base plate allowed for leveling shall not be less than 1.5 times nor more than 2 times the thickness of the leveling nut. Each bolt shall be supplied with 2 nuts and 2 flat washers to facilitate leveling. The anchor bolts and conduits shall be held in place by means of a template until the concrete sets.

Poles shall not be erected until the foundation concrete has set at least seven days and shall be plumbed as directed by the City CM Engineer. The top of concrete foundations shall be finished relative to curb or sidewalk grade as shown on the Plans or as directed by the City CM Engineer.

When grouting the base of the pole, the Contractor shall take care not to allow grout to enter or foul the conduit within the foundation.

Locations shown on the Plans are schematic.

23-3.8 Poles

Poles shall conform to the provisions in Section 86-2.04, "Standards, Poles, Steel Pedestals, and Posts," of the State Standard Specifications and these Specifications.

All hand hole covers must be of steel construction to allow welding after installation.

Embedded Steel poles shall conform to PG&E specifications for pole type 35-7274.

If relocation of Utilities is required, immediate notification shall be given to the appropriate Utility company by the Contractor.

The Contractor may install all underground electrical components, including foundations at the Site of the project; however, no streetlight poles shall be erected until underground conduit is in place.

Street light numbers shall be installed on the poles using minimum 2 ½" high numerals in accordance to City Standard Drawing No. E-25. Numbers shall be adhesive backed Almetek PS-2.5 or approved equivalent. The numbers shall be black on a contrasting background. Pole numbers shall be shown on the as-built plans.

All nuts, washers, screws and other post hardware shall be galvanized.

23-3.9 Conduit

Conduit shall conform to the provisions in Section 86-2.05, "Conduit," of the State Standard Specifications and these Specifications.

Nonmetallic-type conduit may be used on minor/local and major Streets as shown on the Plans. All Street crossings using nonmetallic conduit shall be Schedule 80 conduit.

Rigid Conduit shall conform to Article 346 of the National Electrical Code. All conduit and fittings shall be hot dip galvanized. Each length shall bear the UL label. Installation shall conform to appropriate Articles of such Code. All conduit ends shall be threaded and joined with approved fittings. The use of threadless or set-screw type fittings is not allowed.

All couplings shall be tightened to provide a good electrical and mechanical connection throughout the entire length of the conduit run.

Conduit threads cut in the field and damaged conduit surfaces on metal conduit shall be thoroughly painted with zinc rich paint conforming to Military Specifications DOD-P-21023A.

All conduit ends shall be threaded and capped with standard conduit caps until wiring is started. When the caps are removed the threaded ends shall be provided with approved insulated hot dipped galvanized malleable iron bushings with cast integral lay-in lugs.

The size of conduit used shall be as shown on the Plans.

It shall be the privilege of the Contractor, at his/her own expense, to use larger size conduit if desired, and where large size conduit is used, it shall be for the entire length of the run from outlet to outlet. No reducing couplings will be permitted.

All conduit shall be laid to a depth of not less than twenty-four inches nor greater than thirty-six inches below the curb grade in the sidewalk areas and from the finished surface in Street areas. Conduits in sidewalk areas and parallel to the curb shall not be installed more than twenty-four inches back of curb unless approved by the City CM Engineer.

Conduit shall be placed under existing pavement by approved jacking or boring methods. The pavement shall not be disturbed without the written permission of the City CM Engineer and then only in the event insurmountable obstructions are encountered. Excessive use of water, such that pavement might be undermined, or subgrade softened, will not be permitted.

Conduit ends terminating in pole foundations shall extend 2" vertically above the top of the foundation. Conduit in direct buried poles shall extend to within 2" of the bottom of the hand hole and may not extend above the lowest part of the hand hole opening.

Attention is called to City Standard Drawing No. E-1 with regard to the requirements of conduit within the foundation.

Conduit in pull boxes shall not extend more than two inches inside the box wall. With the exception of pull boxes in non-concrete areas, all conduit entering the pull box from the bottom shall be approved by the City CM Engineer. No conduit or Utility shall pass through a streetlight foundation or pull box except the conduit which terminates within the foundation or pull box.

After the installation of all conductors the ends of conduits terminating in pull boxes and service pedestals shall be sealed with an approved duct seal material.

Where shown on the Plans, conduit will be extended to the limits of the project for future use. The end of such conduits shall be threaded and capped.

In as much as possible, conduit shall be run in a straight line from one pull box or pole to the next maintaining a consistent setback from the curb. Any variation from this requirement shall be approved by the City CM Engineer or Electrical Superintendent.

23-3.10 Pull Boxes

Concrete pull boxes shall conform to the provisions in Section 86-2.06, "Pull Boxes," of the State Standard Specifications and these Specifications.

All pull boxes shall be #3-1/2 unless otherwise noted on the Plans.

All pull boxes shall be installed with extensions. The pull box lid at PG&E's point of connection shall be marked 'PG&E'. All others shall be marked “Street Lights.” Vandal resistant locking lids shall be installed by the contractor at final inspection for the point of service pull box. Contractor shall provide temporary lids during construction. Locking lids shall be galvanized steel diamond plate, minimum thickness

3/16 inches, with minimum two (2) clamping jaws and be keyed to the City of Fresno key.

Attention is directed to Section 86-2.06C, "Installation and Use," of the State Standard Specifications where pull boxes, on long runs, shall be installed and spaced at not over 200-foot intervals.

All pull boxes shall be wrapped with building paper prior to backfilling.

Pull boxes installed in non-concrete areas shall be surrounded by a one (1) foot wide concrete collar, and to a depth equal to the pull box and extension. All conduits shall enter these pull boxes through the bottom, using 90 degree elbows and extend 3-5 inches above the finished grout in the pull box. The collar shall be sloped to drain away from the pull box.

Should grout within existing pull-boxes be disturbed by the Contractor, it shall be restored.

23-3.11 Conductors and Wiring

Conductors and wiring shall conform to the provisions in Section 86-2.08, "Conductors and Cabling," and Section 86-2.09, "Wiring," of the State Standard Specifications and these Specifications.

All wiring and wiring methods shall conform to the provisions of the applicable Codes.

A minimum of three feet of slack in each conductor shall be left at each streetlight standard and in each pull box.

Delete number 5 in Section 86-2.09D, "Splicing and Terminations," of the State Standard Specifications which permits splicing of underground conductors.

All circuit conductors shall be stranded copper with THWN insulation and be of the gauge as shown on the Plans. All conductors shall have insulation colors appropriate to their use and all applicable codes. The use of colored phase tape is not allowed.

City Standard Drawing No. E-5 details the field connections of the circuit conductors.

Conductors within the pole shall be #10 awg Type THWN stranded copper.

Splices in single conductor wire shall be limited to the load side of the service. These splices shall be made using either split bolts or c-tap connectors. The c-tap shall be properly sized for the wires being joined and installed with the proper tooling. The splice shall be insulated to be waterproof as follows:

- Minimum 2 layers of rubber tape,
- 1 layer--½ lapped plastic tape,
- 1 layer friction tape, and then
- Coated with an approved electrical sealing compound.

Should splices between existing aluminum and new copper conductors be required, the splice shall be made using a split bolt designed for that purpose. The conductors and split bolt shall have an appropriate joint compound, designed to prevent oxidation, liberally applied prior to installation.

23-3.12 Fused Splice Connectors

Each streetlight shall be internally fused with an OEM fuse holder and a 5 amp fuse or with a 5 amp KTK type fuse installed in a TRON HEB type fuse holder. The fuse and holder shall be located in the luminaire. Sufficient slack shall be provided to allow easy changing of the fuse as needed. The fuse holder shall be crimped to the wire and the crimp joints insulated as described above for tap type splices.

At service points other than pedestals, a fuse holder and fuse shall be installed in each current carrying conductor. The fuse holder shall be a TRON HEJ type with an SC fuse; 40 amp for #8 awg wire, 60 amp for #4 or #6 awg wire. The holder shall be crimped to the wire using the proper tooling and insulated as described above for tape type splices.

23-3.13 Bonding and Grounding

Bonding and grounding shall conform to the provisions in Section 86-2.10, "Bonding and Grounding," of the State Standard Specifications and these Specifications.

Ground will be obtained by installation of a ground rod within the service. This ground rod shall be bonded to all metallic conduits within the service by means of a bare #8 solid copper conductor. The metallic conduits within all pull-boxes shall be bonded in a similar manner.

Within pull-boxes adjacent to streetlight standards, one end of the solid #8 bonding conductor shall be extended to and attached to the standard using the grounding point as furnished.

Within all conduits, a #8 stranded copper conductor with green THWN insulation shall be installed. It shall be connected to the ground rod at the service and connected to all pole grounding connections. Tap splices at pull boxes shall be made using either split bolts or c-taps.

23-3.14 Painting

All paint shall be furnished by the Contractor. Minor touch-up painting on all material whose surface has been damaged or not protected from corrosion shall be accomplished as directed by the City CM Engineer. Cold galvanizing zinc-rich paint, MILSPEC DOD-P-21035 A, shall be used on all damaged galvanized surfaces.

23-3.15 Service

The service shall conform to the provisions in Section 86-2.11, "Service," of the State Standard Specifications and these Specifications.

All services for multiple streetlight circuits shall be 120/240 volt, 3 wire single phase. This will also be required for installations that have probable expansion adjacent to the current installation. Single street light installations shall be 120 volt 2 wire.

The service pedestal for street light installations shall be as detailed in City Standard Drawing No. E-18.

If designed to feed from a Combination Traffic Signal and Streetlight service pedestal is/shall be as detailed in City Standard Drawing E-15. The Contractor shall be responsible for any modification necessary to existing pedestals not in conformance with the current standard. The Electrical Superintendent shall be contacted for component information as needed.

The underground service if used shall be as detailed in City Standard Drawing Nos. E-4 and E-6. The conductors from the service pull box to the PG&E pull box shall be a minimum #6 awg.

23-3.16 Luminaire

The Following Tables and Specifications provide key parameters and product criteria for LED light source luminaires for both new construction and for projects to replace existing high pressure sodium fixtures with LED Luminaires. For both project types, categories are provided for three conditions: 1) Mid-Block of Major Streets and all Local Street lights; 2) Major Street Intersections; and 3) Expressway or Large Intersections. The sections following the tables present standards for all three luminaire categories. The references used for these specifications are listed following the material specifications in this section.

New Construction – To meet the requirements of this specification, illuminance based analysis must be used to demonstrate that the proposed streetlight luminaire will provide the minimum values specified for the surface of roadways, sidewalks, intersections, and crosswalks. The following tables provide the details needed for than analysis.

As an alternative, the City Engineer maintains a list of approved luminaire products that meet the minimum illumination standards using the maximum pole spacing indicated in the City Standards. In a standard lighting design, approved luminaires for the three lighting categories may be used in lieu of a specific design meeting the criteria in the remaining parts of this section. The <<website reference>> provides the most current list of approved luminaires for the three category uses. These luminaires may be utilized if listed at the time of installation or award of construction contract only if the installation is to be performed under a City Construction Contract.

Roadway, sidewalk, and crosswalk illuminance values higher than the minimum values provided herein can be required at the discretion of the City Engineer depending on the expected site use and night time activity. In those cases a specific lighting design will be required for review and approval.

New Construction
Luminaire Designation
Mid- Block Major and Local Street

SITE PARAMETERS (use actual design or topography if applicable)				
ROADWAY DATA	Roadway Width Local (see API-1 through API-5)			40 to 30 ft
	Roadway Width Collector Divided (see P-52)			40 to 35 ft.
	IES pavement class.	☐ R1 ☐ R2 ☑ R3 ☐ R4		
SIDEWALK DATA	Berm width (from curb to sidewalk)			5 ft to 10 ft
	Sidewalk width			5 ft
	Sidewalk on	☑ Both sides of street ☐ Pole side ☐ Other side		
LIGHT POLE DATA	Local Street Luminaire mounting height see E-2			28 ft
	Local Street Arm length (horizontal) See E-2			8 ft
	Major Mid-Block Luminaire mounting height see E-1			34 feet
	Major Mid-Block Arm length (horizontal) See E-1			12 feet
	Luminaires per pole			1
	Pole set-back from curb			1.5 ft
	Pole spacing (one pole cycle, parallel to path of travel)			See E-7 to E-9
PERFORMANCE CRITERIA				
MAINTAINED ROADWAY ILLUMINATION				
PHOTOPIC ILLUMINANCE	Average horizontal illuminance at pavement			2.0 lux (0.2 fc)
	Avg:min uniformity ratio			20.0
MAINTAINED SIDEWALK ILLUMINATION				
PHOTOPIC ILLUMINANCE	Average horizontal at pavement			1.5 lux (0.15 fc)
	Avg:min uniformity ratio (horizontal)			15.0
LED LUMINAIRE				
INPUT POWER	Max. nominal luminaire input power			30 W
VOLTAGE	Nominal luminaire input voltage (or range as applicable)			120 V
LUMEN MAINT.	Min. % of initial output at 50,000 hours operation			90%
WARRANTY	Min. luminaire warranty			10 years
NOMINAL CCT	Rated correlated color temperature			4100 ± 200 K
BUG RATINGS	Max. nominal backlight-uplight-glare ratings			B1-U2-G1
FINISH	Luminaire housing finish color			Gray
WEIGHT	Luminaire weight			20-30 lb
EPA	Max. effective projected area			0.7 ft^2
MOUNTING	Method	☐ Post-top ☑ Side-arm ☐ Trun./yoke ☐ Swivel-tenon		
	Tenon nominal pipe size (NPS)			2 inches
VIBRATION	ANSI C136.31	☑ Level 1 (normal) ☐ Level 2 (bridge/overpass)		
THERMAL ENVIRONMENT	Typical min. ambient temperature during operation			-20 °C
	Typical max. ambient temperature during operation			40 °C
ELECTRICAL IMMUNITY	ANSI C136.2 Comb. Wave Test Level	☑ Basic (6kV / 3kA)	☐ Enhanced (10kV / 5kA)	☐ Elevated (20kV / 10kA)
CONTROL INTERFACE	☐ None	☐ ANSI C136.10 (3-pin)	☐ANSI C136.41, 5-pin	☑ ANSI C136.41, 7-pin
LED DRIVER	☐ Not dimmable	☑ Dimmable, 0-10V (IEC 60929)	☐ Dimmable, DALI (IEC 62386)	

Luminaire Designation
Major Street Intersection Safety Light

SITE PARAMETERS (use actual design or topography if applicable)				
INTERSECTION DATA	Roadway Width Local (see API-1 through API-5)			40 to 30 ft
	Roadway Width Collector/Divided (see P-52)			40 to 35 ft.
	IES pavement class.	☐ R1 ☐ R2 ☑ R3 ☐ R4		
CROSSWALK DATA	Crosswalk width **standards reference**			**10 ft
	Major Mid-Block Luminaire mounting height see E-1			34 feet
	Major Mid-Block Arm length (horizontal) See E-1			12 feet
	Luminaires per pole			1
	Pole set-back from curb			1.5 ft
	Pole spacing (one pole per corner plus mid-block)			See E-7
PERFORMANCE CRITERIA				
MAINTAINED INTERSECTION ILLUMINATION				
Major/Major PHOTOPIC ILLUMINANCE	Average horizontal illuminance at pavement			7.5 lux (0.75fc)
	Avg:min uniformity ratio			3.0
	Max:min uniformity ratio			6.0
Major/Local PHOTOPIC ILLUMINANCE	Average horizontal illuminance at pavement			5.5 lux (0.55fc)
	Avg:min uniformity ratio			6.0
	Max:min uniformity ratio			20.0
MAINTAINED CROSSWALK ILLUMINATION				
PHOTOPIC ILLUMINANCE	Average horizontal at pavement			7.5 lux (0.75 fc)
	Avg:min uniformity ratio (horizontal)			3.0
LED LUMINAIRE				
INPUT POWER	Max. nominal luminaire input power			90 W
VOLTAGE	Nominal luminaire input voltage (or range as applicable)			120 V
LUMEN MAINT.	Min. % of initial output at 50,000 hours operation			90%
WARRANTY	Min. luminaire warranty			10 years
NOMINAL CCT	Rated correlated color temperature			4100 ± 200 K
BUG RATINGS	Max. nominal backlight-uplight-glare ratings			B2-U0-G3
FINISH	Luminaire housing finish color			Gray
WEIGHT	Luminaire weight			20-30 lb
EPA	Max. effective projected area			0.7 ft^2
MOUNTING	Method	☐ Post-top ☑ Side-arm ☐ Trun./yoke ☐ Swivel-tenon		
	Tenon nominal pipe size (NPS)			2 inches
VIBRATION	ANSI C136.31	☑ Level 1 (normal) ☐ Level 2 (bridge/overpass)		
THERMAL ENVIRONMENT	Typical min. ambient temperature during operation			-20 °C
	Typical max. ambient temperature during operation			40 °C
ELECTRICAL IMMUNITY	ANSI C136.2 Comb. Wave Test Level	☑ Basic (6kV / 3kA)	☐ Enhanced (10kV / 5kA)	☐ Elevated (20kV / 10kA)
CONTROL INTERFACE	☐ None	☐ ANSI C136.10 (3-pin)	☐ANSI C136.41, 5-pin	☑ ANSI C136.41, 7-pin
LED DRIVER	☐ Not dimmable	☑ Dimmable, 0-10V (IEC 60929)	☐ Dimmable, DALI (IEC 62386)	

Retrofit LED Fixtures (on existing poles) - Projects to retrofit LED fixtures on existing City streetlight poles (not new construction or pole relocations) should use the following Retrofit Tables. LED fixtures will be approved based on their performance compared to the corresponding HPS fixture listed in these specifications.

Retrofit on Existing Streetlight Poles
Luminaire Designation
70W High Pressure Sodium Replacement

EXISTING LUMINAIRE TO BE REPLACED (*FOR REFERENCE ONLY*)				
LAMP	Lamp wattage and type			70 W HPS
DOWNWARD OUTPUT	*Initial* downward luminaire output (lumens below horizontal)			5800 lm
LLF	Light Loss Factor			0.76
LENS	☐ Flat ("cutoff" style) ☑ Sag/drop			
IES FORWARD TYPE*	☐ I ☑ II ☐ III ☐ IV ☐ V ☐ VS			
IES LATERAL TYPE*	☐ Very Short ☐ Short ☑ Medium ☐ Long ☐ Very Long			
PERFORMANCE CRITERIA PROPOSED LED LUMINAIRE				
INPUT POWER	Maximum nominal luminaire input power			30 W
VOLTAGE	Nominal luminaire input voltage			120 - 277 V
LUMEN MAINT.	Min. % of initial output at 50,000 hours operation			90%
WARRANTY	Minimum luminaire warranty			10 years
NOMINAL CCT	Rated correlated color temperature			4100 ± 200 K
BUG RATING	Max. nominal backlight-uplight-glare ratings			B1-U2-G1
DOWNWARD OUTPUT	Min. *maintained* luminaire output below horizontal			1,900 lm
FINISH	Luminaire housing finish color			Gray
WEIGHT	Max. luminaire weight			30 lb
EPA	Max. effective projected area			0.7 ft^2
MOUNTING	Mtg. method	☐ Post-top ☑ Side-arm ☐ Trun./yoke ☐ Swivel-tenon		
	Tenon nominal pipe size (NPS)			2 inches
VIBRATION	ANSI C136.31	☑ Level 1 (normal) ☐ Level 2 (bridge/overpass)		
THERMAL ENVIRONMENT	Typical min. ambient temperature during operation			-10 °C
	Typical max. ambient temperature during operation			45 °C
ELECTRICAL IMMUNITY	ANSI C136.2 Comb. Wave Test Level	☑ Basic (6kV / 3kA)	☐ Enhanced (10kV / 5kA)	☐ Elevated (20kV / 10kA)
CONTROL INTERFACE	☐ None	☐ ANSI C136.10 (3-pin)	☐ ANSI C136.41, 5-pin	☑ ANSI C136.41, 7-pin
LED DRIVER	☐ Not dimmable	☑ Dimmable, 0-10V (IEC 60929)	☐ Dimmable, DALI (IEC 62386)	

* See IES TM-3 and TM-15 for an explanation of this classification system. "Very Short" signifies below defined range for "Short," and "Very Long" signifies above defined range for "Long."

Retrofit on Existing Streetlight Poles
Luminaire Designation
Intersection Safety Light - 150W High Pressure Sodium Replacement

EXISTING LUMINAIRE TO BE REPLACED (*FOR REFERENCE ONLY*)		
LAMP	Lamp wattage and type	150 W HPS
DOWNWARD OUTPUT	*Initial* downward luminaire output (lumens below horizontal)	16,000 lm
LLF	Light Loss Factor	0.76
LENS	☑ Flat ("cutoff" style) ☐ Sag/drop	
IES FORWARD TYPE*	☐ I ☐ II ☑ III ☐ IV ☐ V ☐ VS	
IES LATERAL TYPE*	☐ Very Short ☐ Short ☑ Medium ☐ Long ☐ Very Long	
PERFORMANCE CRITERIA PROPOSED LED LUMINAIRE		
INPUT POWER	Maximum nominal luminaire input power	70 W
VOLTAGE	Nominal luminaire input voltage	120 - 277 V
LUMEN MAINT.	Min. % of initial output at 50,000 hours operation	90%
WARRANTY	Minimum luminaire warranty	10 years
NOMINAL CCT	Rated correlated color temperature	4100 ± 200 K
BUG RATING	Max. nominal backlight-uplight-glare ratings	B1-U2-G1
DOWNWARD OUTPUT	Min. *maintained* luminaire output below horizontal	3,500 lm
FINISH	Luminaire housing finish color	Gray
WEIGHT	Max. luminaire weight	30 lb
EPA	Max. effective projected area	0.7 ft^2
MOUNTING	Mtg. method ☐ Post-top ☑ Side-arm ☐ Trun./yoke ☐ Swivel-tenon	
	Tenon nominal pipe size (NPS)	2 inches
VIBRATION	ANSI C136.31 ☑ Level 1 (normal) ☐ Level 2 (bridge/overpass)	
THERMAL ENVIRONMENT	Typical min. ambient temperature during operation	-10 °C
	Typical max. ambient temperature during operation	45 °C
ELECTRICAL IMMUNITY	ANSI C136.2 Comb. Wave Test Level ☑ Basic (6kV / 3kA) ☐ Enhanced (10kV / 5kA) ☐ Elevated (20kV / 10kA)	
CONTROL INTERFACE	☐ None ☐ ANSI C136.10 (3-pin) ☑ ANSI C136.41, 5-pin ☐ ANSI C136.41, 7-pin	
LED DRIVER	☑ Not dimmable ☐ Dimmable, 0-10V (IEC 60929) ☐ Dimmable, DALI (IEC 62386)	

* See IES TM-3 and TM-15 for an explanation of this classification system. "Very Short" signifies below defined range for "Short," and "Very Long" signifies above defined range for "Long."

Retrofit on Existing Streetlight Poles
Luminaire Designation
Expressway Intersection Safety Light - 200W+ High Pressure Sodium Replacement

EXISTING LUMINAIRE TO BE REPLACED (*FOR REFERENCE ONLY*)		
LAMP	Lamp wattage and type	200 W HPS
DOWNWARD OUTPUT	*Initial* downward luminaire output (lumens below horizontal)	22,000 lm
LLF	Light Loss Factor	0.76
LENS	☑ Flat ("cutoff" style) ☐ Sag/drop	
IES FORWARD TYPE*	☐ I ☐ II ☑ III ☐ IV ☐ V ☐ VS	
IES LATERAL TYPE*	☐ Very Short ☐ Short ☑ Medium ☐ Long ☐ Very Long	
PERFORMANCE CRITERIA PROPOSED LED LUMINAIRE		
INPUT POWER	Maximum nominal luminaire input power	120 W
VOLTAGE	Nominal luminaire input voltage	120 - 277 V
LUMEN MAINT.	Min. % of initial output at 50,000 hours operation	90%
WARRANTY	Minimum luminaire warranty	10 years
NOMINAL CCT	Rated correlated color temperature	4100 ± 200 K
BUG RATING	Max. nominal backlight-uplight-glare ratings	B1-U2-G1
DOWNWARD OUTPUT	Min. *maintained* luminaire output below horizontal	6,300 lm
FINISH	Luminaire housing finish color	Gray
WEIGHT	Max. luminaire weight	30 lb
EPA	Max. effective projected area	0.7 ft^2
MOUNTING	Mtg. method ☐ Post-top ☑ Side-arm ☐ Trun./yoke ☐ Swivel-tenon	
	Tenon nominal pipe size (NPS)	2 inches
VIBRATION	ANSI C136.31 ☑ Level 1 (normal) ☐ Level 2 (bridge/overpass)	
THERMAL ENVIRONMENT	Typical min. ambient temperature during operation	-10 °C
	Typical max. ambient temperature during operation	45 °C
ELECTRICAL IMMUNITY	ANSI C136.2 Comb. Wave Test Level ☑ Basic (6kV / 3kA) ☐ Enhanced (10kV / 5kA)	☐ Elevated (20kV / 10kA)
CONTROL INTERFACE	☐ None ☐ ANSI C136.10 (3-pin) ☑ ANSI C136.41, 5-pin	☐ ANSI C136.41, 7-pin
LED DRIVER	☑ Not dimmable ☐ Dimmable, 0-10V (IEC 60929)	☐ Dimmable, DALI (IEC 62386)

* See IES TM-3 and TM-15 for an explanation of this classification system. "Very Short" signifies below defined range for "Short," and "Very Long" signifies above defined range for "Long."

LUMINAIRE REQUIREMENTS

LED light source(s) and driver(s) shall be RoHS compliant. Nominal luminaire input wattage shall account for nominal applied voltage and any reduction in driver efficiency due to sub-optimal driver loading. Luminaire shall accept the voltage or voltage range specified at 50/60 Hz, and shall operate normally for input voltage fluctuations of plus or minus 10 percent. All internal components shall be assembled and pre-wired using modular electrical connections.

The following shall be in accordance with corresponding sections of ANSI C136.37.

- Wiring and grounding
- Terminal blocks for incoming AC lines (electrical mains wires)
- Photocontrol receptacle
- Latching and hinging
- Mounting provisions
- Ingress protection

Painted or finished luminaire surfaces exposed to the environment shall exceed a rating of six per ASTM D1654 after 1000 hours of testing per ASTM B117. Also the coating shall exhibit no greater than 30% reduction of gloss per ASTM D523, after 500 hours of QUV testing at ASTM G154 Cycle 6.

Thermal management - Luminaire shall start and operate in ambient temperature range specified. Maximum rated case temperature of driver and other internal components shall not be exceeded when luminaire is operated in ambient temperature range specified. Mechanical design of protruding external surfaces (heat sink fins) shall facilitate hose-down cleaning and discourage debris accumulation. Liquids or other moving parts shall be clearly indicated in submittals, shall be consistent with product testing, and shall be subject to review by City Engineer.

LED driver, photocontrol receptacle, and control interface - Luminaire designation(s) indicated “None” in the Luminaire Designation Tables need not accept a control signal, and do not require a dimmable driver. If luminaire cannot be furnished without photocontrol receptacle, luminaire shall be furnished with ANSI C136.10 compliant photocontrol receptacle and shorting cap as directed by Owner.

Luminaire designation(s) indicated “ANSI C136.10, 3-pin” in section 0 shall be fully prewired and shall incorporate an ANSI C136.10 compliant receptacle. If a dimmable LED driver is specified, its control wires shall be accessible and electrically isolated. Luminaire designation(s) indicated “ANSI C136.41, 5-pin” in section 0 shall be fully prewired and shall incorporate an ANSI C136.41 compliant receptacle. If a dimmable LED driver is specified, its 0-10V or DALI control wires shall be connected to the receptacle pads as specified in ANSI C136.41.

Luminaire designation(s) indicated “ANSI C136.41, 7-pin” in section 0 shall be fully prewired and shall incorporate an ANSI C136.41 compliant receptacle. If a dimmable LED driver is specified, its 0-10V or DALI control wires shall be connected to the receptacle pads as specified in ANSI C136.41; connection of the two remaining pads shall be by Supplier, as directed by Owner.

Electrical Safety Testing - Luminaire shall be listed for wet locations by a U.S. Occupational Safety Health Administration (OSHA) Nationally Recognized Testing Laboratory (NRTL). Luminaire shall have locality-appropriate governing mark and certification. Luminaire shall meet the performance requirements specified in ANSI C136.2 for dielectric withstand, using the DC test level and configuration.

Electrical Immunity - Luminaire shall meet the performance requirements specified in ANSI C136.2 for electrical immunity, using the combination wave test level indicated in section 0. Manufacturer shall indicate on submittal form whether failure of the electrical immunity system can possibly result in disconnect of power to luminaire.

Interference and power quality - Luminaire shall comply with FCC 47 CFR part 15 interference criteria for Class A (non-residential) digital devices. Luminaire shall comply with section 5.2.5 (luminaires rated for outdoor use) of ANSI C82.77 at full input power and across specified voltage range.

Color attributes - Color Rendering Index (CRI) shall be no less than 60. Nominal Correlated Color Temperature (CCT) shall be as specified in the Luminaire Designation Tables. If submitted nominal CCT is listed in the table below below, measured CCT and Duv shall be as listed.

Table 4.9.3 Error! No text of specified style in document.**.1**. Allowable CCT and Duv (adapted from ANSI C78.377)

Manufacturer-Rated Nominal CCT (K)	Allowable IES LM-79 Chromaticity Values	
	Measured CCT (K)	Measured Duv
2700	2580 to 2870	-0.006 to 0.006
3000	2870 to 3220	-0.006 to 0.006
3500	3220 to 3710	-0.005 to 0.007
4000	3710 to 4260	-0.005 to 0.007
4500	4260 to 4746	-0.004 to 0.008
5000	4746 to 5311	-0.004 to 0.008
5700	5312 to 6020	-0.003 to 0.009
6500	6022 to 7040	-0.003 to 0.009

If submitted nominal CCT is not listed in the above table, measured CCT and Duv shall be as per the criteria for Flexible CCT defined in ANSI C78.377.

Identification - Luminaire shall have an external label per ANSI C136.15. Luminaire shall have an internal label per ANSI C136.22.

REQUIRED SUBMITTALS

If a specific model Luminaire to be provided appears on the City of Fresno approved Luminaire Products at the time of installation (or the Time of bid if a City Construction Contract), then a

submittal package is not required. If an “or equal” luminaire is proposed for installation, the submittals listed below, with the completed submittal form will be required for review and approval prior to installation.

Family grouping in accordance with LED Lighting Facts is permitted, provided this is clearly indicated on the submittal form provided in **Error! Reference source not found.**A, and clearly communicated via a letter that includes detailed calculations relating the tested product(s) to the submitted product

Submittals must include:

Product cut sheets for Luminaire; LED light source(s); LED driver(s) and surge protection device. If dimmable LED driver is specified, provide diagrams illustrating light output and input power as a function of control signal.

Submittals shall include instructions for installation and maintenance, and, summary of luminaire recycled content and recyclability shall be in accordance with the FTC Green Guides, expressed as a percentage of luminaire weight.

Submittals shall include IES LM-79 luminaire photometric report(s) produced by the test laboratory. The test laboratory shall satisfy LED Lighting Facts accreditation requirements. The LM-79 report shall include the following information:

- Name of test laboratory
- Report number
- Date of testing
- Complete luminaire catalog number
- Description of luminaire, LED light source(s), and LED driver(s)
- Goniophotometry
    - IES TM-15 Backlight-Uplight-Glare (BUG) ratings shall be for initial (worst-case) values, i.e., Light Loss Factor (LLF) = 1.0.
    - If luminaires are tilted upward for calculations in section □, BUG ratings shall correspond to the same angle(s) of tilt.

- Lumen maintenance calculations and supporting test data shall be in accordance with LED Lighting Facts guidance. Exception: calculations shall be based on the cumulative hours of operation specified in the appropriate Luminaire Designation Table.

- Submit completed ENERGY STAR TM-21 Calculator as an electronic Excel file.

- Computer-generated point-by-point photometric analysis of maintained light levels shall be provided for review and approval. The proposed LED Luminaire shall provide similar or more Illuminance values on average compared to the equivalent High Pressure Sodium Luminaire. See Luminaire Designation table for calculation area for each category. Mounting height and mast arm length for the proposed pole shallow be used

for the computations. For analysis, the pole should be placed at the mid-point of the street/property side of the calculation area.

Calculations shall be for maintained values, i.e. Light Loss Factor (LLF) < 1.0, where LLF = LLD x LDD x LATF, and Lamp Lumen Depreciation (LLD) shall be 0.90 or the value calculated in this section whichever is lower. Luminaire Dirt Depreciation (LDD) = 0.90. Luminaire Ambient Temperature Factor (LATF) = 0.96

- Mesopic multipliers (i.e., effective luminance factors) shall not be used. All values shall assume photopic visual adaptation.
- Submit IES LM-63 format electronic file containing luminous intensity data associated with submitted LM-79 report(s) and used for point-by-point calculations. (.ies files)

- Summary of Joint Electron Devices Engineering Council (JEDEC) or Japan Electronics and Information Technology Industries (JEITA) reliability testing performed for LED packages
- Summary of reliability testing performed for LED driver(s)
- Written product warranty as per Warrantee section below
- Safety certification and file number indicating compliance with UL 1598.
- Applicable testing bodies are determined by the US Occupational Safety Health Administration (OSHA) as Nationally Recognized Testing Laboratories (NRTL) and include: CSA (Canadian Standards Association), ETL (Edison Testing Laboratory), and UL (Underwriters Laboratory).
- Documentation supporting any U.S. origin claims for the product, in accordance with FTC guidance.

WARRANTY

Warranty shall be of the minimum duration specified in the Luminaire Designation Tables and shall cover maintained integrity and functionality of the following: Luminaire housing, wiring, and connections; LED light source(s) (Negligible light output from more than 10 percent of the LED packages constitutes luminaire failure); and LED driver(s) Warranty period shall begin 90 days after date of invoice, or as negotiated by City such as in the case of an auditable asset management system.

NORMATIVE REFERENCES

The publications listed below form a part of this specification to the extent referenced. Publications are referenced within the text by their basic designation only. Versions listed shall be superseded by updated versions as they become available.

American National Standards Institute (ANSI)

- C78.377-2011 (or latest), American National Standard for the Chromaticity of Solid State Lighting Products
- C82.77-2002 (or latest), American National Standard for Harmonic Emission Limits - Related Power Quality Requirements for Lighting Equipment
- C136.2-2014 (or latest), American National Standard for Roadway and Area Lighting Equipment – Dialectric Withstand and Electrical Immunity Requirements
- C136.10-2010 (or latest), American National Standard for Roadway and Area Lighting Equipment – Locking-Type Photocontrol Devices and Mating Receptacles—Physical and Electrical Interchangeability and Testing
- C136.15-2011 (or latest), American National Standard for Roadway and Area Lighting Equipment – Luminaire Field Identification
- C136.22-2004 R2009 (or latest), American National Standard for Roadway and Area Lighting Equipment – Internal Labeling of Luminaires
- C136.31-2010 (or latest), American National Standard for Roadway Lighting Equipment – Luminaire Vibration
- C136.37-2011 (or latest), American National Standard for Roadway and Area Lighting Equipment - Solid State Light Sources Used in Roadway and Area Lighting
- C136.41-2013 (or latest), American National Standard for Roadway and Area Lighting Equipment—Dimming Control Between an External Locking Type Photocontrol and Ballast or Driver

American Society for Testing and Materials International (ASTM)

- B117-11 (or latest), Standard Practice for Operating Salt Spray (Fog) Apparatus
- D523-08 (or latest), Standard Test Method for Specular Gloss
- D1654-08 (or latest), Standard Test Method for Evaluation of Painted or Coated Specimens Subjected to Corrosive Environments
- G154-06 (or latest), Standard Practice for Operating Fluorescent Light Apparatus for UV Exposure of Nonmetallic Materials

ENERGY STAR®

- ENERGY STAR TM-21 Calculator, rev. 020712 (or latest, www.energystar.gov/TM-21Calculator)

Federal Communications Commission (FCC)

- 47 CFR Part 15, Telecommunication – Radio Frequency Devices

Federal Trade Commission (FTC)

- Complying with the Made in USA Standard, December 1998 (http://business.ftc.gov/advertising-and-marketing/made-usa)

- Green Guides, 16 CFR Part 260, Guides for the Use of Environmental Marketing Claims

Illuminating Engineering Society of North America (IESNA or IES)

- LM-50-13 (or latest), IES Approved Method for Photometric Measurement of Roadway and Street Lighting Installations

- LM-61-06 (or latest), IESNA Approved Guide for Identifying Operating Factors Influencing Measured Vs. Predicted Performance for Installed Outdoor High Intensity Discharge (HID) Luminaires

- LM-63-02 (R2008 or latest), ANSI/IESNA Standard File Format for the Electronic Transfer of Photometric Data and Related Information

- LM-79-08 (or latest), IESNA Approved Method for the Electrical and Photometric Measurements of Solid-State Lighting Products

- LM-80-08 (or latest), IESNA Approved Method for Measuring Lumen Maintenance of LED Light Sources

- RP-8-00 (or latest), ANSI / IESNA American National Standard Practice for Roadway Lighting

- RP-16-10 (or latest), ANSI/IES Nomenclature and Definitions for Illuminating Engineering

- TM-15-11 (or latest), Luminaire Classification System for Outdoor Luminaires

- TM-21-11 (or latest), Projecting Long Term Lumen Maintenance of LED Light Sources

International Electrotechnical Commission (IEC)

- 60929 Annex E, Control Interface for Controllable Ballasts (0-10V)
- 62386, Digital Addressable Lighting Interface (DALI)

LED Lighting Facts

- Submission Requirements (http://www.lightingfacts.com/About/Content/Manufacturers/SubmissionRequirements)

Municipal Solid-State Street Lighting Consortium (MSSLC)

- Model Specification for Networked Outdoor Lighting Control Systems, V2.0 (or latest)

National Electrical Manufacturers Association (NEMA)

- LSD 63-2012, Measurement Methods and Performance Variation for Verification Testing of General Purpose Lamps and Systems

Underwriters Laboratories (UL)

- 1598 Third Edition (or latest), Luminaires

3-3.17 Photoelectric Control

Photoelectric controls (PEC) shall conform to the provisions in Section 86-6.11, "Photoelectric Controls," of the State Standard Specifications and these Specifications.

The PEC shall be a quick acting, twist lock, long life, Type IV.
If the service pedestal is equipped with a lighting contactor and no master photo control is installed, the Contractor shall install one atop the traffic signal mast arm pole adjacent to the service pedestal or atop the nearest streetlight pole. The master photo control shall be wired back to the service pedestal using three #12 AWG stranded copper wires color matched to the PEC. The PEC will be mounted using hardware manufactured for that purpose or fabricated and approved by the Electrical Superintendent.

All streetlights and safety lights fed from a pedestal equipped with a contactor shall be switched, by that contactor and their PEC's replaced with shorting caps.

23-3.18 Traffic Control

Traffic control shall be provided in accordance with the State of California, "Manual of Traffic Controls for Construction and Maintenance Work Zones," latest edition. Payment shall be included in the lump sum bid for street lighting.

SECTION 23-4 – ORNAMENTAL STREET LIGHTING (Section 30 incorporated into Section 23)

23-4.1 INTENT

It is the intent of these Specifications to describe the minimum acceptable parameters for ornamental streetlight installation in the City.

23-4.2 GENERAL

Each project may select a pole, color, luminaire and ornamentation as provided by this standard. To provide adequate individualization the following variety is provided as an example of style only:

Poles ..... 3 designs (different lengths)
Colors ..... 2 (black, grey)
Configurations ..... 2 (single/double-may be mixed)
Cross Arms ..... 2 designs
Luminaries:
- Capitals ..... 2 designs
- Globes ..... 2 designs/2 sizes
- Wattage ..... 3 (50, 70 & 150)
- Ornamentation ..... Final and/or Band

To minimize future costs to the City in view of the wide range of design options, each installer must provide to the City spares of all components in quantities dependent upon the number of poles installed in the project.

Poles Installed	Spares
12 or less	2
13-30	3
31 or more	4

23-4.3 SPECIFICATIONS

Furnishing and installing streetlights shall conform to the provisions of Section 86, “Electrical Systems,” of the State Standard Specifications and the State Standard Drawings, most recent version; City Standard Drawing Nos. E-1 thru E-27, as applicable; these Specifications and the streetlight Plan(s).

23-4.4 STREETLIGHT PLAN

The designer shall submit to the City Engineering Division for review a detailed plan of the proposed installation. This plan shall include proposed locations of the streetlights, existing streetlights in or adjacent to the project, location of electrical service, photo electric control, pull boxes and routing of conduit.

After any required changes are made, the plan(s) will be approved and signed. No installation Work shall be undertaken until the plans are signed.

Work or equipment not specified or shown on the Plan(s) which is necessary for the proper operation of the installation shall be provided and installed at no additional cost to the City.

The locations of foundations, poles, services, pull boxes and other appurtenances shown on the Plan(s) are approximate. Exact locations and grades will be established if necessary by either the Project inspector or the TSSL Supervisor or his/her authorized representative.

When the project is complete and all lights are working, a final inspection has been made and all punch list items are corrected, the Contractor shall provide an "as-built" drawing to the City.

23-4.5 MATERIALS

All materials required to complete the Work under this contract shall be furnished by the Contractor.

The materials furnished and used shall be new, except such used materials as may be specifically provided for on the Plans.
All Work and materials shall be in full accordance with the latest rules and regulations of the National Board of Fire Underwriters, local and State laws and regulations, the State Industrial Accident Commission's Safety Orders, and the regulations of the Pacific Gas and Electric Company pertaining to service equipment and installations thereof. All Work shall comply with Section 11-104 of the City of Fresno Municipal Code, the National Electrical Manufacturer's Association Standards and all regulations and codes as stated in Section 86-1.02, "Regulations and Codes," of the State Standard Specifications. Nothing in these Plans and Specifications shall be construed to permit work not complying with these codes.

23-4.6 EQUIPMENT LIST

All equipment and materials that the Contractor proposes to install shall conform to these Specifications and the Plans. A list of substitute equipment and/or materials, along with a written descriptive summary, describing the functions of the components which the Contractor proposes to install shall be submitted along with his/her streetlight plan. The list shall be complete as to the name of the manufacturer, size and identifying number of each item. The list shall be supplemented by such other data as may be required. In all cases, the judgment of the TSSL Supervisor shall be final as to whether substitute equipment and/or material recommended by the Contractor conforms to the intent of these Specifications and is acceptable for use.
The wattage and spacing of the streetlights shall be such that the appropriate average maintained illuminance is provided per ANSI/IES RP-8, Table 2(b).

23-4.7 WARRANTIES, GUARANTEES AND INSTRUCTION SHEETS

All equipment furnished shall be guaranteed to the City by the manufacturers for a period of not less than one (1) year, unless otherwise indicated, following the date of acceptance of such equipment. If any part(s) is found to be defective in materials or workmanship within the one-year period, and it is determined by the TSSL Supervisor or by an authorized manufacturer's representative that said part(s) cannot be repaired on the Site, the manufacturer shall provide a replacement part(s) of equal kind and/or type during the repair period and shall be responsible for the removal, handling, repair or replacement and reinstallation of the part(s) until such time as the street lighting equipment is functioning as

specified and as intended herein; the repair period shall in no event exceed 72 hours, including acquisition of parts.

The one-year guarantee on the repaired or replaced parts shall again commence with the date of reassembly of the system.

All Work done by the Contractor shall be guaranteed in writing to the Engineer for the one-year period from the date of acceptance.

Copies of all operating instructions, parts lists, assembly diagrams, etc., shall be provided to the City with the “As-Built” plan(s).

23-4.8 FOUNDATIONS

The size of the foundations will be dependent on the pole length. Poles over 12 feet shall have a foundation 48" deep. Poles 12 feet or less in length shall use a 36" deep foundation. The foundations shall be 24" in diameter. The top 8" to 12" shall be formed round or square as appropriate to the individual installation.

The foundation shall be set back 30 inches on center from the face of the curb.

Foundation concrete shall contain not less than 470 pounds of cement per cubic yard. It shall be placed in a single pour against undisturbed earth where practicable. The top portion shall be formed and finished to present a neat appearance. The top of the finished foundation shall be level. The use of leveling nuts to plumb a pole will not be permitted.

No Utilities shall be permitted to run through a foundation.

Where obstructions or other conditions prevent construction of planned foundations, the Contractor shall construct an effective foundation satisfactory to the Engineer.

The bottom of concrete foundations shall rest on firm ground. When placing the foundations, the Contractor shall place all conduit ends in their proper position and at the correct heights and shall securely hold them in position during the pouring of concrete. The conduits ends shall be capped before any concrete is poured.

Both forms and earth to be in contact with foundations shall be thoroughly moistened before placing concrete.

Anchor bolts shall be galvanized and shall extend above the finished base as needed to ensure the proper installation of anchoring hardware. The anchor bolts and conduits shall be held in place by means of a template until the concrete sets.

Poles shall not be installed until the foundation concrete has set at least five Days.

23-4.9 POLES

In order to reduce the possibility of wire theft, all poles must be of steel construction and approved by TSSL. All hardware shall be tamper resistant stainless steel. The

color of the poles shall be black or gray. The poles shall be engineered to withstand 100 mph wind forces per the AASHTO standards including a 30% gust factor.

If relocation of Utilities is required, immediate notification shall be given to the appropriate Utility company by the Contractor.
The Contractor may install all underground electrical components, including foundations at the site of the project; however, no streetlight poles shall be installed until underground conduit is in place.

The anchor bolts and associated hardware shall be hot dipped galvanized. The anchor bolts shall be 3/4" x 18", “L” type.

The top of the pole shall be provided with a 3 inch outside diameter tenon to facilitate mounting of the luminaire assembly or cross arm.

The two way cross arm assembly, if and where used, shall be galvanized steel or cast aluminum. The finish shall be a premium polyurethane coating and shall match the color of the pole.

23-4.17 LUMINAIRE

The luminaries shall be High Pressure Sodium of the “acorn” type equipped with a UV inhibited polycarbonated globe. An internal glass/borosilicate refractor providing for IES Type III MCO distribution is required.

The luminaire ballast shall be designed for 120 volt operation at 50, 70 or 150 watts as shown on the Plans and shall have a high power factor. The starting aid shall be of the 3-wire type.

The capital portion of the luminaire assembly shall be cast aluminum. The finish shall be a premium polyurethane coating and shall match the color of the pole.

23-4.18 PHOTOELECTRIC CONTROL

The Photoelectric Control (PEC) shall be a twist lock, long life type installed in the capital portion of the pole. If controlled from a service pedestal, the PEC shall be installed at the pole nearest the service pedestal. The PEC shall be rated at 1000 watts minimum. It shall be wired back to the service pedestal with 3 #12 AWG stranded copper conductors color coded to match the PEC.

If controlled from a Combination Traffic Signal/Streetlight service pedestal, no additional PEC is required. The associated safety light PEC will control the lighting contactor.

23-4.19 ORNAMENTATION

Luminaire globes may be modified using a finial, decorative band or both. The finial is available on either globe option. The band is available only on the 8" neck model.

Cast Aluminum Posts tapered fluted shafts	**WADSWORTH Series** 19" dia. base

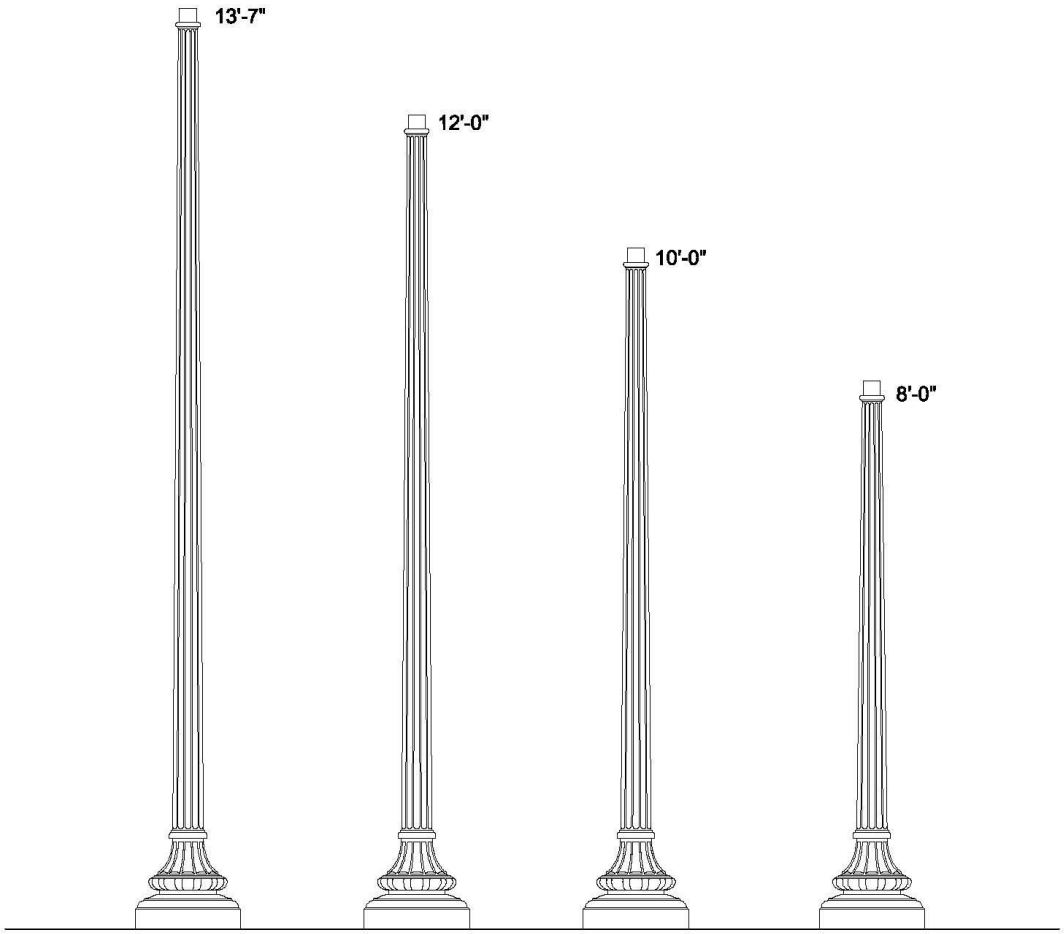

SPECIFICATIONS

DESCRIPTION The post shall be all cast aluminum construction with a classic double-tapered, fluted base and a gracefully tapered 12-flute cast shaft. The post shall be Holophanes' catalog number *WXXC*/19-CA/*finish*.

MATERIALS The post shall be heavy wall, cast aluminum produced from certified ASTM 356.1 ingot per ASTM B179-95a or ASTM B26-95. The castings shall be formed true to the pattern with complete detail. All hardware shall be tamper resistant stainless steel. Anchor bolts to be completely hot dip galvanized.

CONSTRUCTION The cast shaft shall be circumferentially welded to the base casting and shipped as one piece for maximum structural integrity. All exposed welds below 8' shall be ground smooth. All welding shall be per ANSI/AWS D1.2-90. All welders shall be certified per Section 5 of ANSI/AWS D1.2-90.

DIMENSIONS The post shall be X'- *XX*" in height with a 19" diameter base. The shaft diameter shall taper from 3.5" at the top to 5.5" above the base. An integral 3" O.D. tenon shall be provided at the top for luminaire mounting. The post top shall include a transitional donut between the fluted shaft and the tenon.

INSTALLATION The post shall be provided with four, hot dip galvanized L-type anchor bolts to be installed on a slotted 15" diameter bolt circle. A door shall be provided in the base for anchorage and wiring access. A grounding screw shall be provided inside the base opposite the door.

For finish specifications and color options, see " **Finish**" section in catalog.

HOLOPHANE® *An Acuity Brands Company*
LEADER IN LIGHTING SOLUTIONS 214 OAKWOOD AVENUE - NEWARK, OHIO 43055

US-1640 Rev. 4-7-05 Page 1 of 2

Shown as a style example only, all poles must be of steel construction with steel hand hole covers.

WADSWORTH Series

Cast Aluminum Posts

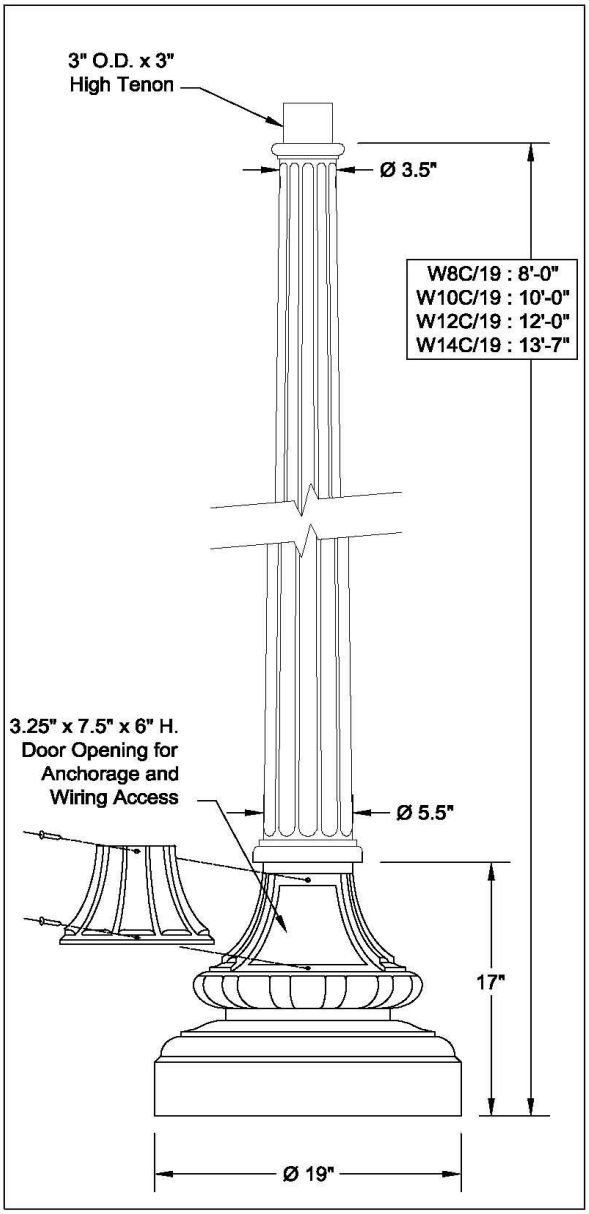

HOLOPHANE® An Acuity Brands Company
LEADER IN LIGHTING SOLUTIONS 214 OAKWOOD AVENUE - NEWARK, OHIO 43055

Ordering Guide

sample catalog number

W12C/19 - CA/BK -

Post	-	material/finish	-	options
WADSWORTH 12' 12' height cast shaft 19" dia. base		Cast Aluminum Black		

Post (check appropriate boxes, add height in blank)

Catalog #	*Heights*
☐ **W8C/19**	8'-0"
☐ **W10C/19**	10'-0"
☐ **W12C/19**	12'-0"
☐ **W14C/19**	13'-7"

Material/Finish

Catalog Suffix	Description
☐ **-CA/BK**	Cast Aluminum/Black (std.)
☐ **-CA/DG**	Cast Aluminum/Dark Green
☐ **-CA/DB**	Cast Aluminum/Dark Bronze
☐ **-CA/PP**	Cast Aluminum/Prime Painted
☐ **-CA/CC**	Cast Aluminum/Custom Color

(for complete finish and color options, see " **Finish**" section in catalog)

Optional Equipment

Catalog Suffix	Description
☐ - _____	Receptacles (see Accessories section)
☐ - _____	Banner Arms (see Accessories section)
☐ - _____	Flag Pole Holders (see Accessories section)
☐ - _____	Custom Logos (see Accessories section)
☐ - _____	Signage (see Signage section)

(for optional equipment not found in catalog, consult factory)

ANCHORAGE GUIDE

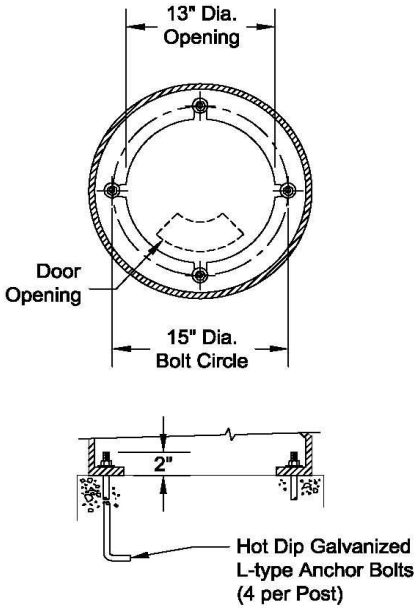

US-1640 Rev. 4-7-05 Page 2 of 2

Shown as a style example only, all poles must be of steel construction with steel hand hole covers.

UTILITY GRANVILLE®
SERIES LUMINAIRE

MAXIMUM WEIGHT - 48 lbs.
MAXIMUM EFFECTIVE PROJECTED AREA - 1.38 sq. ft.

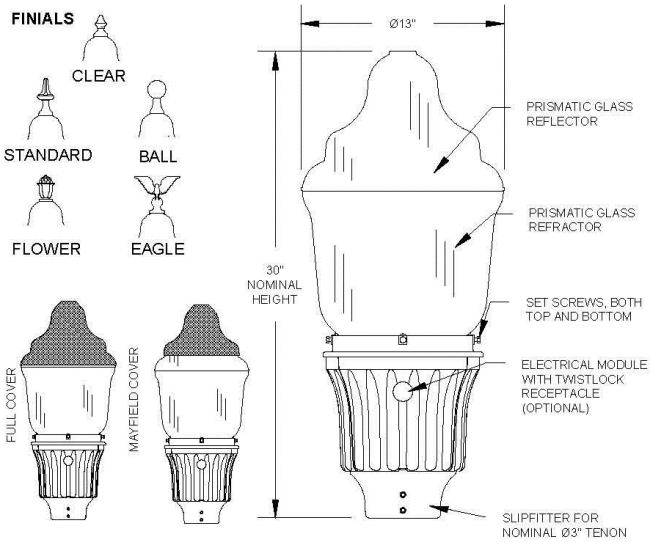

ORDERING INFORMATION

EXAMPLE: *GVU 050HP 12 B 3 N N U*
GVU **N**

BALLAST TYPE (MOGUL BASE)
050HP = 50W HPS
070HP = 70W HPS
100HP = 100W HPS
15AHP = 150W 55V HPS
175MH = 175W MH
100MV = 100W MV
175MV = 175W MV
250MV = 250W MV

VOLTAGE
12 = 120 VOLT
20 = 208 VOLT
24 = 240 VOLT
27 = 277 VOLT
34 = 347 VOLT
48 = 480 VOLT
MT = MULTITAP (120, 208 240, 277 VOLT)

HOUSING COLOR
B = BLACK
Z = BRONZE
N = GREEN
A = AS SPEC

OPTICS
3 = IES TYPE III DISTRIBUTION
4 = IES TYPE IV DISTRIBUTION
5 = IES TYPE V DISTRIBUTION

NO DECORATIVE OPTIONS
N = NONE

BALLAST TYPE (MEDIUM BASE)
50DHP = 50W HPS
70DHP = 70W HPS
100DHP = 100W HPS
15DHP = 150W 55V HPS
70DMH = 70W MH (NOT AVAIL. W/ 480V)
100DMH = 100W MH (NOT AVAIL. W/ 480V)
150DMH = 150W MH (NOT AVAIL. W/ 480V)
175DMH = 175W MH

FINIAL
N = NONE
C = 3"CLEAR
S = 5" STANDARD
F = FLOWER
B = BALL
E = EAGLE
P = PAWN

TRIM FINISH
U = NO TRIM USED
B = BLACK
Z = BRONZE
G = GOLD
N = GREEN
U = NO TRIM, AND CLEAR OR NO FINIAL
A = AS SPEC.

OPTIONS
P = PROTECTED STARTER FOR HPS UNITS ONLY
H = PHOTOCONTROL RECEPTACLE
T = BOTH NEMA TWISTLOCK RECEPTACLE AND PROTECTED STARTER TOGETHER (HPS UNITS ONLY)
FCOVX - FULL DECORATIVE ALUMINUM TOP COVER (FOR X INSERT B, Z, N, G, OR A COLOR)
MCOVX - MAYFIELD ALUMINUM TOP COVER (COVERS 2/3) (FOR X INSERT B, Z, N, G, OR A COLOR)

ACCESSORIES
LAMP = SHIP APPROPRIATE LAMP AS A LINE ITEM. SEE LAMP SHEET
GV1ASDXX = INTERNAL SHIELD, XX = 90, 120, OR 180 DEGREES OF HOUSE SIDE CUT-OFF
GVBANDX = AN OPTIONAL DECORATIVE BAND KIT ADDED TO GLASS ASSEMBLY. FIELD INSTALLED (FOR X INSERT B, Z, N, OR A)

Specifications

GENERAL DESCRIPTION
The Utility GranVille is designed for ease of maintenance with the plug-in electrical module common to each of the luminaires in Holophane's Utility Luminaire Series. The traditional acorn shaped luminaire, while reminiscent of the 1920's, contains a precision optical system that maximizes post spacings while maintaining uniform illumination.

OPTICAL SYSTEM
The optical system consists of a precisely molded thermal resistant borosilicate glass refractor and top reflector. The glass top reflector redirects over 50 % of the upward light into the controlling refractor while allowing a soft uplight component to define the traditional acorn shape of the luminaire. Two decorative aluminum covers are available. The lower refractor uses precisely molded prisms to maximize pole spacings while maintaining uniform illuminance. Three refractors are available, designed for I.E.S. type III, IV, and V distributions.

LUMINAIRE HOUSING
The luminaire housing, cast of aluminum, provides an enclosure for the plug-in electrical module. Four uniquely designed stainless steel spring clips enclosed in a clear polyvinyl chloride sleeve and adjusted by hex head stainless steel 1/4-20 bolts securely cradle the prismatic glass refractor. The nickel plated lamp grip socket and three station incoming line terminal block are prewired to a five conductor receptacle for ease in connection the electrical module. The slipfitter will accept a 3" by 2-7/8" to 3-1/8" O.D. tenon.

LUMINAIRE HOUSING / DOOR
Cast of aluminum, the housing / door is removable without the use of tools and is retained by a stainless steel aircraft cable. For units with an E.E.I.-N.E.M.A. twist lock photocell receptacle, the door contains an acrylic "window" to allow light to reach the cell.

ELECTRICAL MODULE
The ballast components are mounted on a steel plate that is removable without the use of tools. A matching five conductor plug connects to the receptacle in the luminaire housing to complete the wiring. Where a starting aid is required, it is provided with a separate plug-in connector and can be replaced without the use of tools. For photoelectric operation, the electrical module is provided with an E.E.I.-N.E.M.A. twist lock photocell receptacle.

BALLASTS
(Refer to Ballast Data Sheet for specific operation characteristics)
50 watt 120 volt High Pressure Sodium (HPS) ballasts are High Power Factor Reactor type. All other HPS ballast are High Power Factor Autotransformer type. 175 watt Metal Halide (MH) ballasts are Peak Lead Autotransformer type. 70 and 100 watt MH units are available only with High Power Factor High Reactance type ballast.
All Mercury Vapor (MV) ballasts are High Power Factor Constant Wattage Autotransformer (CWA) type.

FINISH
The luminaire is finished with polyester powder paint applied after a seven stage pretreatment precess to insure maximum durability.

ARCHITECTURAL OUTDOOR ORDER #: TYPE: DRAWING NO: US-2590

THIS DRAWING, WHEN APPROVED, SHALL BECOME THE COMPLETE SPECIFICATION FOR THE MATERIAL TO BE FURNISHED BY HOLOPHANE ON THE ORDER NOTED ABOVE. A UNIT OF SIMILAR DESIGN MAY BE SUPPLIED, BUT ONLY AFTER APPROVAL BY THE CUSTOMER IN WRITING. ON POLE ORDERS AN ANCHOR BOLT TEMPLATE PRINT WILL BE SUPPLIED WITH EACH ANCHOR BOLT ORDER TO MATCH THE POLE PROVIDED.

THIS PRINT IS THE PROPERTY OF HOLOPHANE AND IS LOANED SUBJECT TO RETURN UPON DEMAND AND UPON EXPRESS CONDITION THAT IT WILL NOT BE USED DIRECTLY OR INDIRECTLY IN ANY WAY DETRIMENTAL TO OUR INTERESTS, AND ONLY IN CONNECTION WITH MATERIAL FURNISHED BY HOLOPHANE.

HOLOPHANE
LEADER IN LIGHTING SOLUTIONS
An AcuityBrandsCompany
214 OAKWOOD AVENUE - NEWARK, OHIO 43055

SCALE: N/A
DRAWN: RAF
APP'D:
DATE: 08-06-02

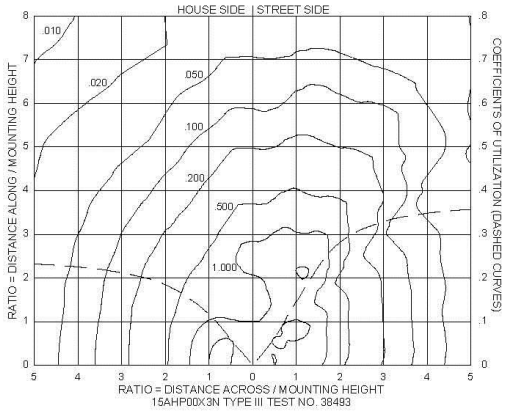

15AHP00X3N TYPE III TEST NO. 38493

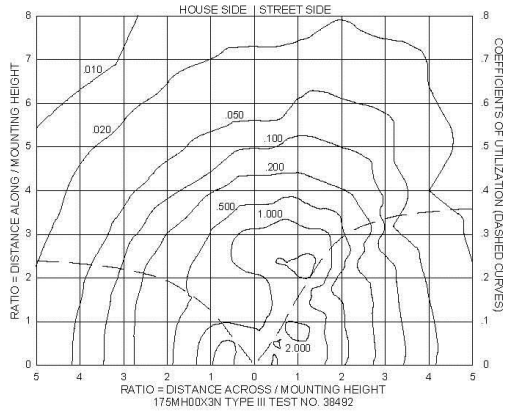

175MH00X3N TYPE III TEST NO. 38492

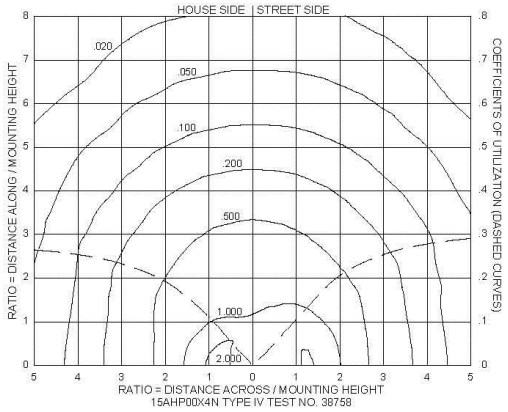

15AHP00X4N TYPE IV TEST NO. 38758

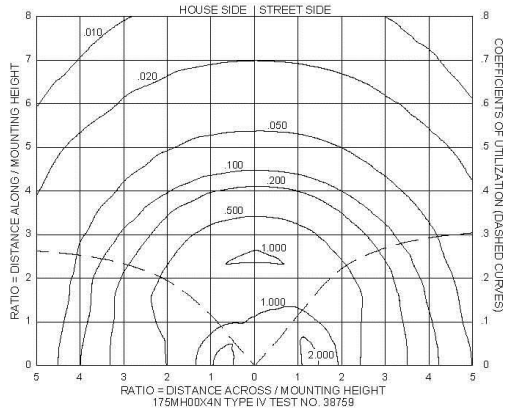

175MH00X4N TYPE IV TEST NO. 38759

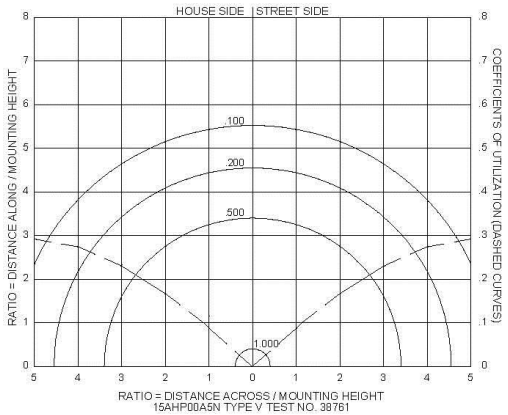

15AHP00A5N TYPE V TEST NO. 38761

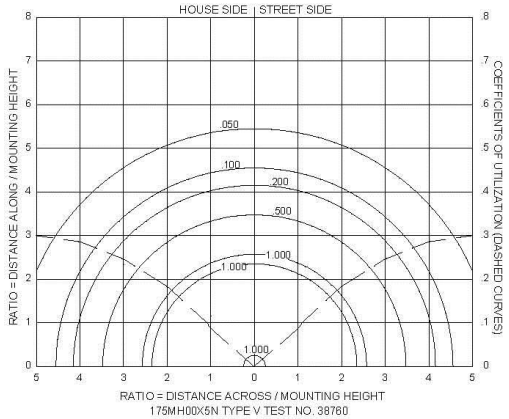

175MH00X5N TYPE V TEST NO. 38760

HOLOPHANE
LEADER IN LIGHTING SOLUTIONS
An Acuity Brands Company
214 OAKWOOD AVENUE - NEWARK, OHIO 43055

TYPICAL PHOTOMETRIC DATA (ISOFOOTCANDLE CHARTS AND COEFFICIENT OF UTILIZATION CURVES)

US-2590

Isofootcandle data is based on a 15 foot mounting height. To determine values for mounting heights other than 15 feet, multiply the values for mounting heights following factors:

10' - 2.25	12' - 1.56	14' - 1.15
16' - 0.88	18' - 0.69	20' - 0.56
22' - 0.46	24' - 0.39	

Holophane Granville® Luminaire

GENERAL DESCRIPTION
The Utility GranVille is designed for ease of maintenance with the plug-in electrical module common to each of the luminaires in Holophane's Utility Luminaire Series. The traditional acorn shaped luminaire, while reminiscent of the 1920's, contains a precision optical system that maximizes post spacings while maintaining uniform illumination.

OPTICAL SYSTEM
The optical system consists of a precisely molded thermal resistant borosilicate glass refractor and top reflector. The glass top reflector redirects over 50 % of the upward light into the controlling refractor while allowing a soft uplight component to define the traditional acorn shape of the luminaire. The lower refractor uses precisely molded prism s to maximize pole spacings while maintaining uniform illuminance. Three refractors are available, designed for I.E.S. type III, IV, and V distributions.

LUMINAIRE HOUSING
The luminaire housing, cast of aluminum, provides an enclosure for the plug-in electrical module. Four uniquely designed stainless steel spring clips enclosed in a clear polyvinyl chloride sleeve and adjusted by hex head stainless steel 1/4-20 bolts securely cradle the prismatic glass refractor. The nickel plated lamp grip socket and three station incoming line terminal block are prewired to a five conductor receptacle for ease in connection the electrical module. The slipfitter will accept a 3" by 2-7/8" to 3-1/8" O.D. tenon.

LUMINAIRE HOUSING / DOOR
Cast of aluminum, the housing / door is removable without the use of tools and is retained by a stainless steel aircraft cable. For units with an E.E.I.-N.E.M.A. twist lock photocell receptacle, the door contains an acrylic "window" to allow light to reach the cell.

ELECTRICAL MODULE
The ballast components are mounted on a steel plate that is removable without the use of tools. A matching five conductor plug connects to the receptacle in the luminaire housing to complete the wiring. Where a starting aid is required, it is provided with a separate plug-in connector and can be replaced without the use of tools. For photoelectric operation, the electrical module is provided with an E.E.I.-N.E.M.A. twist lock photocell receptacle.

BALLASTS
(Refer to Ballast Data Sheet for specific operation characteristics)
50 watt 120 volt High Pressure Sodium (HPS) ballasts are High Power Factor Reactor type. All other HPS ballast are High Power Factor Autotransformer type.
175 watt Metal Halide (MH) ballasts are Peak Lead Autotransformer type. 70 and 100 watt MH units are available only with High Power Factor High Reactance type ballast.
All Mercury Vapor (MV) ballasts are High Power Factor Constant Wattage Autotransformer (CWA) type.

FINISH
The luminaire is finished with polyester powder paint applied after a seven stage pretreatment process to insure maximum durability.

Holophane Wadsworth Cast Aluminum Post

DESCRIPTION The post shall be all cast aluminum construction with a classic double-tapered, fluted base and a gracefully tapered 12-flute cast shaft. The post shall be Holophane catalog number *W12C/19-CA/finish. (e.g. BK = Black)*

MATERIALS The post shall be heavy wall, cast aluminum produced from certified ASTM 356.1 ingot per ASTM B179-95a or ASTM B26-95. The castings shall be formed true to the pattern with complete detail. All hardware shall be tamper resistant stainless steel. Anchor bolts to be completely hot dip galvanized.

CONSTRUCTION The cast shaft shall be circumferentially welded to the base casting and shipped as one piece for maximum structural integrity. All exposed welds below 8' shall be ground smooth. All welding shall be per ANSI/AWS D1.2-90. All welders shall be certified per Section 5 of ANSI/AWS D1.2-90.

DIMENSIONS The post shall be X'- XX" in height with a 19" diameter base. The shaft diameter shall taper from 3.5" at the top to 5.5" above the base. An integral 3" O.D. tenon shall be provided at the top for luminaire mounting. The post top shall include a transitional donut between the fluted shaft and the tenon.

INSTALLATION The post shall be provided with four, hot dip galvanized L-type anchor bolts to be installed on a slotted 15" to 16" diameter bolt circle. (Optional base slotted for 7" to 9" diameter bolt circle.) A door shall be provided in the base for anchorage and wiring access. A grounding screw shall be provided inside the base opposite the door.

For finish specifications and color options, see "**Finish**" section in catalog.

SECTION 24 – DEMOLITION OF BUILDINGS

24-1 GENERAL

This section covers the demolition of buildings, foundations, underground and surface utilities and appurtenances, concrete slabs and asphalt concrete. In the absence of limiting provisions in the Special Conditions, all such facilities shall be removed.

24-2 PUBLIC SAFETY

All Work shall conform to the requirements of the California Building Code as adopted by City in the Fresno Municipal Code.

24-3 UTILITIES

The Contractor shall notify all Utility companies 48 hours in advance of demolition so Utility mains can be protected and disconnected.

24-4 PERMITS

The Contractor shall secure a building demolition permit from the City and a permit from the San Joaquin Valley Air Pollution Control District, if required.

24-5 DISPOSITION OF DEBRIS

The Contractor shall arrange for the disposition of all debris off the Site to an area satisfactory to the Engineer. This will be at the expense of the Contractor and is a part of the Contract Price.

24-6 BASEMENTS

All basements shall be backfilled. The material used for backfill shall have a minimum R-value of 55. Tests for “R” value shall be made in accordance with California Test Method 301 and shall be at the expense of the Contractor. The backfill shall have a relative compaction of 90% except when the basement is within the Street right-of-way the top two feet of backfill shall have a relative compaction of 95% as determined by ASTM 1557. All concrete will be removed before backfilling.

24-7 MEASUREMENT AND PAYMENT

Payment shall be as specified in the Special Conditions.

SECTION 25 – LANDSCAPE IRRIGATION SYSTEMS

25-1 PART 1 GENERAL CONDITIONS

25-1.1 General

A. This Work shall consist of furnishing and installing landscape irrigation systems as indicated on the Plans and Specifications and as directed by the Engineer. Due to the scale of the Plans, it is not always possible to indicate all offsets, fittings, etc., which may be required. The Contractor shall carefully investigate the structural and finished conditions affecting the Work, and plan the Work accordingly, furnishing such fittings, etc., as may be required to meet such conditions. Plans are generally diagrammatic and indicative of the Work to be installed in the most direct and professional manner, so that conflicts between irrigation systems, planting, and architectural features will be avoided.

B. The Contractor shall verify and be familiar with the location and size of the existing water supply and shall make approved type connections and install new Work. Water meters are to be provided by the City Water Division as shown on the Plans.

C. The Contractor shall verify the correctness of all finish grades within the Work area in order to ensure the proper soil coverage (as specified) of the irrigation system pipes.

D. After the system has been completed, the Contractor shall instruct an authorized representative of the City Parks Department in the operation and maintenance of the system and shall furnish a complete set of operating instructions.

E. The Contractor shall adequately protect the Site, and the Work, erecting barricades, construction fences, or implementing other protective methods as needed for protection of the Site during both the construction and maintenance period. Replacement and/or repair of any materials, including the labor to effect the Work shall be completed at the Contractor's sole cost at no additional cost to the City. The Contractor shall also protect the adjacent property, and the public, from operations or acts that may damage or harm either, and shall be responsible for any damage, injury or loss due to the Contractor's acts or negligence as determined by the City.

F. The Contractor shall arrange for, secure, and pay for all permits for water service points, meter connections, and fees for water usage during the course of the construction and/or maintenance period until the irrigation Work is accepted by the City.

G. The Contractor shall determine location of underground Utilities and perform Work in a manner which will avoid possible damage. Call Underground Service Alert (USA)-1-800-642-2444 at least three Days before excavation to secure location of underground Utilities. Hand excavate as required. Maintain grade stakes set by others until removal is mutually agreed upon by parties concerned. It is the Contractor's responsibility to verify the location of all on-Site and off-Site Utilities,

either existing or new, and to take appropriate measures to accommodate for all such encounters without extra charge to the City.

25-1.2 Design

A. The objective of the Plans and Specifications is to provide an assembled and installed landscape irrigation system which will operate in an efficient and satisfactory manner so that the finished system shall efficiently irrigate all areas to be covered and shall prove satisfactory in all aspects to the City. The irrigation system shall be designed in such a manner so that all irrigation will occur between the hours of 10:00 p.m. and 6:00 a.m.

B. The Contractor shall not willfully install the irrigation facilities as indicated on the Plans when it is obvious in the field that obstructions or grade differences exist that might not have been considered in the design. Such obstructions or differences shall be brought to the attention of the Engineer, in writing by the Contractor, for consideration of adjustment in proposed facility locations prior to installation of facilities.

C. Elevations shown on Plans are not specified in this section. Coordinate all Work with the earthwork/rough grading Contractor and the grading and drainage Plan in order to arrive at rough grades that will allow tolerance for topsoil (if needed) that will ultimately affect the depth of irrigation piping and the final placement of heads and emitters, as called for on the Plans.

25-1.3 Tests and Inspections

A. Pre-construction Meeting: The Contractor and all Subcontractors on the project shall attend this pre-project meeting before beginning construction of the project. **The chief inspector and managing City Division shall be established at the pre-construction meeting.**

B. Inspections shall be done on an ongoing basis by the various City Divisions involved in the project. Whenever “City” or “City of Fresno” is noted within these Specifications it is also construed to imply a duly authorized representative of the City, including inspectors and consultants acting on behalf of the City’s interest.

25-1.4 Submittals

A. Submit manufacturer’s or vendor’s certified analysis for valves, fittings, pipe, filters, backflow units, valve boxes, pressure regulators, pumps, and all other materials and equipment as described on the Plans, and listed within these Specifications for irrigation materials, parts and/or other products proposed for the Site. Submit other data substantiating that materials comply with specified requirements. Such certificates may be tags, labels, and/or manufacturer’s literature, and **all submittals shall be reviewed and stamped as approved by the City before Contractor attempts to purchase the materials or begins Work on the project. The City will not be responsible for materials and labor expended or secured by the Contractor prior to approval of the submittals.**

Submit 5 copies of submittals to City for review.

B. Submit proposed Work schedule, indicating dates for each type of irrigation Work during normal seasons for such Work in areas of the Site. Correlate with specified maintenance periods to provide maintenance from date of substantial completion. Do not begin Work until such schedule is reviewed and stamped as approved by the City and returned to the Contractor. Such Work schedule, once accepted, may not be revised except for reasons beyond the landscape installer's control. Revise dates only if approved by City and after submitting to City documentation of reasons for delays.

C. Substitutions of materials, equipment, or methods from these given in these Specifications or shown on the Plans shall be accepted in writing by the City before delivered to the Site for use. Where the Specifications indicate "or approval equal," the Contractor shall provide the City with literature for one or two alternative products for review. All submittals shall be made well before that item of Work is scheduled for installation. Five (5) copies of the literature shall be supplied for review and acceptance or rejection. Written acceptance for an "approved equal" product by the City of Fresno is required prior to installation. The City shall govern as to what name brands and/or substitutes of materials are an "equal" to the specified product on the Plans. **This decision shall be final.**

25-1.5 Project Record Documents

A. Throughout progress of the Work, maintain an accurate record of changes in the Contract Documents.

B. Promptly, following authorization of construction, designate one complete set of the Contract Documents, to be used only as the "Job Record Set." Do not use the Job Record Set for any purpose other than to record changes occurring in the Contract Documents during progress of the Work. Make entries within 24 hours after receipt of information that the change has occurred.

C. Upon completion of the Work, and as a condition of its acceptance, deliver the properly annotated Job Record Set to the City for review. From the Job Record Set, an "As-Built" drawing shall be prepared by the Contractor on reproducible Mylar on City standard media and submitted to the City before final acceptance of the Work. Make entries within 24 hours after receipt of information that the change has been made.

D. Upon completion of the Work, and as a condition of its acceptance, deliver the properly annotated Job Record Set to the City for review. The Contractor shall submit the reductions and reproducibles to the City before the final inspection.

E. It shall be the Contractors responsibility to prepare "As-Built" plans which are professionally drafted and approved by the City before full acceptance of the project is given by the City. Final "As-Built" plans shall be professionally drafted by the Contractor onto reproducible Mylar. From the Job Record Set, an "As-Built" drawing shall be prepared by the Contractor as follows:

1. One (1) full size reproducible Mylar

2. Three sets of full size bluelines

3. (1) reproducible Mylar at 50% size of the original

4. One set of the reduced blue lines shall be marked so that each lateral and main irrigation line is delineated with a different color so as to clearly distinguish the individual irrigation lines from one another. This requirement shall not apply to the subsurface irrigation lines. The colored set shall then be laminated by Contractor before delivery to the City.

   The originals and copies shall clearly be marked with the words “As-Built” plans, and marked with the date of preparation.

5. As-Built Dimensions: The Contractor shall dimension from two permanent points of reference the location of the following:

   a. Isolation valves
   b. Existing water lines and size connections
   c. Pressurized main lines
   d. Pressure relief valves
   e. Pressure main line connections
   f. The final routing and location of the pressure mainlines and non pressurized lateral lines under pavement.
   g. Routing of the control wires
   h. Automatic flush and air vacuum relief valves
   i. Quick coupler valves
   j. “Stub off’s” for future use

F. A coverage test shall be performed on all irrigation area in the presence of the City inspector. Coverage test(s) shall include, but shall not be limited to the testing of spray heads, dripper lines, and other irrigation system components shown on the Plan. The Contractor shall furnish all materials and labor required to achieve irrigation coverage acceptable to the City.

25-2 PART 2 GENERAL CONDITIONS

25-2.1 General

Any material specified by name and/or model number in the Specifications or on the Plans shall be deemed to be used for the purpose of identifying the materials and insuring the specific use of that material in the construction of the system.

25-2.2 Materials

A. Piping material used in landscape irrigation systems shall conform to the following requirements:

   1. <u>Mainline Irrigation Pipe:</u> All mainline or pressure supply line plastic pipe shall be standard weight class 315 polyvinyl chloride (PVC) 1120 high impact solvent weld pipe. [Pipe 5cm (2") or less shall be Schedule 40 PVC, solvent weld]. The Contractor is to properly thrust-block all changes of direction in the mainline pipe.

2. Lateral-line Irrigation Pipe: All lateral-line or non-pressure line plastic pipe shall be standard weight class 200 polyvinyl chloride (PVC) 1120 normal impact. All plastic pipe shall conform to current National Sanitation Foundation (NSF), Iron Pipe Size (IPS) standards and ASTM requirements. Pipe shall be of approved white rigid PVC compound.

3. Pipe Identification: All pipe shall be continuously and permanently marked with the following information:

   a. Manufacturer's name or trademark
   b. Nominal pipe size
   c. Schedule and type of pipe
   d. Pressure rating in PSI
   e. NSF seal of approval

B. Plastic Pipe Fittings and Connections: All plastic fittings shall be white rigid PVC combination type I and II, grade I standard weight schedule 40 and/or have a working pressure rating no lower than that of the pipe. The sockets must conform to the outside diameter of the pipe, as recommended by the pipe manufacturer.

1. All plastic fittings and connectors shall be injection molded of an improved PVC compound featuring high tensile strength, high chemical resistance and high impact strength in term of current ASTM standards from such fittings and as manufactured by Lasco Industries or approved equal. Where threads are required in plastic fittings, these shall be injection molded also.

2. Fittings Identification: All fittings shall bear the manufacturer's name or trademark, material designation, size applicable IPS schedule, and NSF seal of approval.

3. Plastic-to-steel Connections: At all PVC pipe to steel pipe connections, the Contractor shall complete the steel connection first. Teflon tape shall be used on all threaded PVC to steel pipe joints applied to the male threads only, and light wrench pressure to be applied. A minimum of three (3) wraps of Teflon tape will be required.

C. Plastic Pipe Cement: Solvent cement joints for plastic pipe and fittings will be made as prescribed by the manufacturer. The high chemical resistance of the pipe and fitting compounds specified in the foregoing sections makes it mandatory that an aggressive colored primer, which is a true solvent for PVC, be used in conjunction with a solvent cement designed for the fit of pipe and fittings of each size range specified.

D. Galvanized Pipe: Pipe shall be hot dip galvanized continuous welded, seamless, schedule 40 steel pipe conforming to applicable current ASTM.

E. Galvanized Fittings: All fittings shall be galvanized malleable iron ground joint Schedule 40 conforming to applicable current ASTM.

F. Sprinkler Heads: Sprinkler heads shall be of the type and performance as listed in the sprinkler head legend on the Plans.

G. Drip Emitters: Drip emitters shall be of the type and performance as listed in the sprinkler head legend on the Plans.

1. Polyethylene Sub-Surface Drip Irrigation Line (SDI): Nominal sized one-half inch low density, linear polyethylene tubing, housing internal pressure compensating, continuously self-flushing, integral drip emitters. The emitters shall continuously clean themselves while in operation. Fittings shall be manufacturers standard barbed as needed to provide connections for the SDI tubing. Compression fittings will not be accepted.

2. All drip irrigation systems shall utilize an automatic line flushing valve at the end of each independent zone or drip line (maximum flow per valve shall not exceed 15 gpm). This valve shall be capable of flushing one gallon of water at the beginning of each irrigation cycle. The valves shall be a Toro CEFCH-H, Agrifim FVA series or approved equal with ½" MPT connection, or other connection as necessary to fit onto the poly or SDI line as needed.

3. Each independent irrigation zone shall utilize an air/vacuum relief valve, as designated on the Plans and/or at the irrigation zone's highest point(s). The purpose of the valve is to evacuate air from the zone at start-up, and to relieve vacuum at zone shut down. Air/vacuum relief shall be a Netafim (TLARV), Toro (YD-500-34) or approved equal.

4. The filter type shall be installed as designated on the Plans. If not designated, the filter shall be a multiple disc filter sized the same as the valve with color-coded filter elements indicating the mesh size of the element being used. The discs shall be constructed of chemical resistant thermoplastic for corrosion resistance with a minimum mesh size of 140, and a maximum of 180.

5. The tech filter, if specified, shall be installed and sized as designated on the Plans. The filter shall be a chemical infused multiple disc filter sized per manufacturers requirements with color-coded filter elements indicating that the filter is infused with herbicide. The discs shall be constructed of chemical resistant thermoplastic for corrosion resistance with an equivalent mesh size of 140. The size of the filter shall be a specified on the Plans. If the filter is specified on the Plans to be installed near the backflow unit, the Tech filter shall be installed **DOWNSTREAM** of the backflow preventer.

H. Drip Filters: Filters shall be capable of efficiently removing foreign particles that would clog emitters. Filters shall be a flushable type and contain a replaceable stainless steel element. Filters shall contain a 200 mesh screen as prescribed by the emitter manufacturer. The filter shall be of the type and performances as listed on the Plans.

I. Remote Control Valves: Electric remote control valves shall be of the type and performance as listed on the Plans.

J. Control Wiring: Connections between the controller and remote control valves shall be continuous, made with direct burial wire AWG-UF Type, single conductor, installed in accordance with valve manufacturer's wire chart and specifications,

Valve “hot” wire to be no smaller than AWG No. 14. Valve “common” wire to be no smaller than AWG No. 12.

1. All electrical work shall be done in accordance with the governing codes and regulations.

2. Where more than one wire is placed in a trench, the wiring shall be taped together at intervals of 3 m (10 ft.).

3. All splices shall be made using waterproof sealing packets. An expansion loop of 50cm (20 in.), minimum, shall be provided at each wire connection and/or directional turn, unless otherwise specified.

4. Wiring shall occupy the same trench and shall be installed along the same route as the pressure supply lines whenever possible.

5. All wire splices in field runs will be located in valve boxes, and indicated on “as-built” plans.

6. A separate common wire shall be installed for each controller.

7. Control wires will be identified at the controller and at the remote control valve using metal tags stamped with the valve number and attached to the wire.

K. Automatic Controller (Electrical, Ambiant Leit or Alextronics): Controllers shall be fully automatic in operation, and shall be as specified on the construction Plans.

1. Controllers shall be certified by Underwriters’ Laboratories and bear their stamp of approval.

2. Each controller shall have the capacity to operate the amount of valve stations indicated on the Plans.

3. Controllers shall be of the type and performance as specified on the Plans.

4. Controllers shall be programmable for various operations as indicated on the Plans, including programmable master valve and pump on/off functions when such equipment is specified.

L. Gate Valves: Gate valves shall be of the type and performance as specified on the construction Plans and of domestic manufacture.

M. Backflow Prevention Unit: The backflow prevention unit shall be of the type and performance as specified on the construction Plans. The backflow prevention unit shall also be approved by the University of Southern California Foundation for Cross-Connection Control and Hydraulic Research. The backflow prevention unit shall be of an approved type and be installed downstream to water meters, in a location approved by the Engineer.

1. For all drip irrigation systems, reduce-pressure backflow prevention units shall be installed in accordance with City Standard Specifications.

2. After being installed at the project Site, the backflow prevention unit must be tested and approved as functioning properly by an approved AWWA certified tester within 5 Days of installation with the result sent to the City Water Division. Approval of the backflow prevention unit must precede any final inspection of the irrigation system. Plumbing for the water meter to the backflow preventer shall consist of galvanized pipe and fittings.

N. Pressure Regulating and Pressure Sustaining Valve: The pressure regulating and pressure sustaining valve shall be of the type and performance as specified on the construction Plans and of domestic manufacture.

O. Booster Pump: Pump shall provide high efficiency, reliability and stable operating pressures. Pump submittals shall be approved by the Engineer, in writing. Pumps must be UL approved.

1. Minimum control provisions shall incorporate phase failure (low and high voltage) protection, time-delayed start, and low discharge pressure safety and/or flow control circuits.

2. Concrete pump pad shall surround entire mechanical package (all piping and appurtenances) by a minimum of 30 cm (12") in both length and width.

3. Pump shall be installed on elevated pump base constructed of reinforced concrete or fabricated steel; motor base shall be a minimum of 15cm (6") above concrete equipment pad.

4. Welded or grooved steel or brazed/soldered copper tube piping systems shall be provided. Flanged iron piping is not allowed. Threaded connections are allowed only at the interface of threaded mechanical appurtenances.

5. All above-grade piping shall be sized to maintain velocities below 5 ft. per second.

6. Piping shall be isolated from pump through use of bolted flexible couplings or non-rigid grooved couplings so as to allow for minor misalignment and to avoid imposing stress loads on the pump volute or motor frame.

7. Valves shall be 200 PSI rated, lug style, lever operated domestic butterfly valves 6.3cm (2 ½") or greater or full port, bronze-bodied ball valves 5cm (2") or less.

8. Bypass check valve shall be flanged or wafer-style silent check valve in order to minimize water hammer during pump cycling.

9. Inlet and discharge pressure gauges shall be 5 cm (2") stainless chased, glass faced, liquid filled and installed with gauge cocks (range to be minimum 50% greater than normal operating pressure).

P. Electrical Pump Control Panel: weather proof enclosure shall have start push button and H-O-A selector switch suitable for a 120/240V, single or 3-phase booster pump. This unit shall be remote-operated by automatic irrigation

controllers through the installation of a 24-volt AC relay of sufficient amperage rating for the system.

Q. Valve Box

1. Valve Box: Rectangular or round plastic valve box as manufactured by Carson Industries, Brooks or approved equal. The following plastic valve box sizes shall be utilized when the box is installed in landscape areas:

   a. Single valves ≤ 2" size w/o filters: #1419-18 with standard 1419-4B non hinged bolt down cover.

   b. Single valves ≥ 1" size with filters: #1220-12 with standard 1220-4B non hinged bolt down cover (add extensions as necessary to achieve box height needed).

   c. Automatic flush/air vacuum relief valves: #910-10 with standard 910-4B non hinged bolt down cover.

   d. Wire splice boxes: #1419-18 with standard 1419-4B non cover.

   e. Isolation valves: #1419-12 with standard 1419-4B non hinged bolt down cover (add extensions as necessary to achieve box height needed).

   f. Quick couplers: #1419-12 with standard 1419-4B non hinged bolt down cover (add extensions as necessary to achieve box height needed).

   g. Valve boxes located in concrete areas such as sidewalks, driveways, concrete parkway strips, and other paved areas shall be manufactured from concrete with concrete lids. Sizes as noted above.

   h. Contractor shall place one full sized clay or concrete brick under the corner of each rectangular valve box, and minimum of two full sized bricks under each round valve box.

2. Valve Box Cover, Plastic marked “Irrigation Control Valve” with lockable (bolt down) lids. Each valve box lid shall be permanently marked with a metal tag (rigid aluminum, stainless steel, or brass) bolted to the top of the valve box lid with brass or stainless steel nuts/bolts with the final approved valve sequencing/designation. The metal tag shall be minimum 2" X 3" in size. The valve box lids shall be labeled as follows:

   a. Master automatic control valves for each area: The designation MV

   b. Automatic control valves: The designation ICV followed by the valve sequence as listed on the Plan. If a satellite system is specified for the project, the satellite number and sequence that the valve is hooked up to back at the controller shall be labeled on the valve box lid.

   c. Quick Coupler valve: The designation QCV

d. Automatic flush valves: The designation AFV followed by the automatic valve number that the AFV is attached to.

e. Air vacuum relief valve: The designation AVR followed by the valve number that the AVR is attached to.

f. Isolation Valves: The designation ISO/V.

g. Wire splice box: The designation SPLICE

h. Unused blank wires shall be marked with the words UNUSED WIRE and terminal location where the wire is hooked up back at the controller.

R. Operations and Maintenance Manuals: Within ten Days prior to completion of the construction, the Contractor shall prepare and deliver to the City all required and necessary descriptive material in complete detail and sufficient quantity, properly prepared in two individually bond sets of Operating and Maintenance Manuals. These manuals shall describe the material installed and shall be in sufficient depth to permit operating personnel to understand, operate and maintain all equipment. Spare parts(s) lists and related manufacturer identification shall be included for each installed equipment item. Each complete, bound manual shall also contain the following information:

1. Index sheet, stating Contractor's address and telephone number, duration of guarantee period, and list of equipment, with names and addresses of local manufacturer representatives.

2. Complete operating and maintenance instructions on all major equipment.

S. The Contractor shall be responsible for correct procedures in loading, unloading, stacking, transporting, and handling all materials to be used in the system. The Contractor shall avoid rough handling which could affect the useful life of equipment. Pipe shall be handled in accordance with the manufacturer's recommendations on loading, unloading and storage.

T. Water Meter: Prior to the beginning of the maintenance period, the Contractor shall contact the City Utilities Division and request the installation of the appropriately sized water meter.

U. A protective steel cage shall be installed in all locations as designated on the Plans (if designated). The caging shall be constructed to allow space for the entire piping assembly associated with the RPB unit, controller, and all associated equipment. If not called for, the caging shall be as follows:

1. Concrete slab: Class A concrete, minimum of six (6) inches thick through the entire slab.

2. Enclosure metal: #9 Gauge (171 lbs/SF) expanded metal grating with openings not to exceed 3/4". Metal shall be cut to fit dimensions as necessary, with a continuous weld along the seams and connection points to the metal framing.
Steel support bars: 1.5" X 1/8" flat steel bars for vertical isolated structural

support, and 1.5” X 1/8” angle iron at all perimeter frame locations. Miter all corners at 90°. All bar intersections shall be welded with 3/8” fillet welds.

3. Locking slot, eye bolt and corner supports: Locking slot shall be .250 inch angle iron slot, bent at 90E angle, and capable of inserting into eye bolt. Eye bolt shall be sized to match locking slot, and shall be of stainless steel (SS) construction, 1.0: dia and a minimum of 3/8". Eye bolt shall be imbedded into concrete slab minimum of 2". Corner anchors shall be 3/8" iron, imbedded a minimum of 2" into the slab.

4. Hinge bolts: 1½” long and ½“ dia SS bolts with associated SS nut and washers.

5. Address plate: Two 3" by 8" address plates shall be mounted on two locations of the controller cage in the upper right hand location. One plate shall be located on the sort section of the cage, and one plate on the long section of the cage. Plate shall be manufactured of 1/8" steel plating, and welded with continuous bead into the angle iron support. The water meter address shall be placed onto one of the address plates. The numbers shall consist of 1" high, adhesive backed, and weather, reflective material.

V. A commercially manufactured insulating blanket shall be placed around the backflow preventer assembly to protect the unit from freezing. The blanket shall extend over all piping, the RPB unit, hose bibs, pressure gauges, and all other equipment above ground associated with the RPB. The controller housing shall not be included in blanket if the controller is an ambient light powered unit. The insulating blanket shall be manufactured by Hydro Peripherals (Polar Parka), World Wide Canvas (Backflow Blanket) or approved equal.

25-3 PART 3 EXECUTION

25-3.1 Trenching

A. Excavations shall be open vertical construction, sufficiently wide to provide free working space around the Work installed and to provide ample space for backfilling and tamping.

B. The use of a vibratory plow or methods other than open vertical trenching will not be allowed without the written approval of the Engineer. To obtain such approval, a field test must be performed, at the proposed Site, with the equipment to be used in the presence of the Engineer. The field test is to indicate if the proposed Site is favorable to the plowing method. Approval for plowing at one location does not allow the use of plowing at another location. Approval for plowing must be obtained for each location where the use of plowing is proposed. If, at previously approved plowing locations, conditions for plowing become unfavorable as determined by the Engineer, plowing shall be terminated.

C. Trenches for pipe and equipment shall be cut to required grade lines, and compacted to provide and accurate grade and uniform bearing for the full length of the line.

D. When two pipes are to be placed in the same trench, a minimum 10 cm (4") space between pipes must be maintained.

E. The depth of the trenches shall be sufficient to provide a minimum cover above the top of the pipe as follows:

1. 60cm (24") minimum over main lines.
2. 45cm (18") minimum over non-pressure (rotary pop-up) lateral lines.
3. 30cm (12") minimum over non-pressure (pop-up spray head) lateral lines.
4. 60cm (24") minimum over lines located in paved areas.

25-3.2 Installation

A. Water Supply: The Contractor shall connect to water supply line as indicated on the Plans. Connections to the existing water supply shall be made at approximately the location shown on the Plans. Minor changes caused by actual Site conditions may be required.

B. Layout: The Contractor shall be responsible for layout of proposed facilities and any minor adjustments required due to differences between the site and Plans. Any such deviations in layout shall be within the intent of the original Plans. The City will indicate the proposed precise location of the control panels.

C. Grades: Before starting work on the system, the Contractor shall carefully check all grades to ensure the Work may safely proceed and keep within the specified material depth. If the slope of the landscaped area exceed 5%, inline check valves shall be installed at each sprinkler subject to low head drainage.

D. Standard of Installation: Material and workmanship shall be in accordance with local laws and regulations of legally constituted authorities; except where provisions of these Specifications exceed such requirements, these Specifications shall govern.

E. General Installation: Any equipment installed by the Contractor and deemed to be for the use of the City in various situations (i.e., control valves, control panels, etc.) shall be so installed to be readily accessible and quickly operable. Two keys for lockable equipment shall be supplied to the City upon installation. Equipment deemed by the City to be inoperable for its intended purpose shall be reinstalled by the Contractor in an operable position before approval will be given. Routing of pressure supply lines as indicated on the Plans is diagrammatic. Install lines (and various assemblies) in such a manner as to conform to details on Plans.

F. Assemblies: Install all assemblies specified herein according to the respective detail Plans or Specifications pertaining to specific items required to complete the Work. Perform Work according to best standard practice, with prior approval.

1. Install no multiple assemblies on plastic lines. Provide each assembly with its own outlet.

2. All brass pipe and fittings shall be assembled using Teflon tape, or equivalent, applied to the male threads only. A minimum of three (3) wraps of Teflon tape will be required.

3. All plastic and galvanized steel threaded pipe and fittings shall be assembled using Teflon tape applied to the male threads only. A minimum of three (3) wraps of Teflon tape will be required.

G. Line Clearance: All lines shall have a minimum clearance of 10cm (4") from each other and 15cm (6") from lines of other trades. Parallel lines shall not be installed directly over one another.

H. Plastic to Steel Connections: At all PVC pipe connections, the Contractor shall complete the steel connections first. Connections shall always be plastic into steel, never steel into plastic. Teflon tape shall be used on all threaded PVC to steel pipe joints, applied to male threads only, and light wrench pressure is to be applied.

I. Pipe and Fittings, Galvanized Steel Pipe: All pipe shall be reamed and rough edges or burrs removed so that a smooth and unobstructed flow can be obtained.

1. Reducing fittings shall be used where any change in pipe size occurs. Bushings shall not be used unless specifically authorized by the City. No fitting shall be joined closer than 15cm (6" unless authorized by the City).

2. Teflon tape shall be best quality, and shall be carefully and smoothly placed on the male threads only. All threaded joints must be tightened with wrenches. No caulking or joint compound of any kind will be permitted.

3. Immediately upon installation of lines, all openings shall be capped or plugged to prevent the entrance of materials that would obstruct the pipe. Caps shall remain in place until removal is necessary for completion of installation.

4. Thrust blocks shall be installed recommended by the pipe manufacturer, or as shown on the detail Plans.

5. All mainline and lateral pipe traversing paved concrete or hardscaped areas is to be installed in schedule 40 galvanized sleeves that are at least 5 cm (2") sizes larger than the pipe within the sleeve. Also all wire is to be sleeved in schedule 40 PVC pipe that allows a generous amount of room for the wires present and allows for pulling additional wire in the future.

J. <u>Joining of Pipe:</u> It is the responsibility of the Contractor to be familiar with any and all methods of assembling, joining, and installation of the various types of pipe to be used. The Contractor shall strictly adhere to recommendations in the manufacturer's guide. If during any phase of the Work, the Contractor or any of the workers are not familiar with the recommended procedures, the Contractor shall arrange with the manufacturer of the particular product for the services of a qualified manufacturer's representative to instruct the workers in the proper recommended procedures.

K. Plastic Pipe: The Contractor shall exercise care in handling, loading, unloading, and storing plastic pipe and fittings. All plastic pipe and fittings shall be stored under a weatherproof roofed structure before using and shall be transported in a vehicle with a bed long enough to allow the length of pipe to lie flat so as to avoid undue bending or concentrated external load at any point.

1. All lumber, rubbish, and rocks shall be removed from the trenches by the Contractor. Pipe shall have a firm uniform bearing for the entire length of each pipe line to prevent uneven settlement. Wedging or blocking under riser tees shall be done only if specified on the Plans. Pad trenches with soil as necessary to provide uniform bearing surfaces.

2. Where extensive lengths of pipe are installed, snake pipe in trench from side to side to allow for expansion and contraction. 30cm per 30m (1" per 100') of pipe is the minimum allowance for snaking. Never lay pipe when there is water in the trench or when the temperature is O.C. (32°F) or below.

3. All changes in the direction of the pipe shall be made with fittings, not by bending.

4. Make solvent joints with a non-synthetic bristle brush in the following sequence:

   a. Make sure pipe is cut square and all connecting surfaces are properly cleaned and dry.

   b. Apply an even coat of colored primer to pipe prior to application of solvent.

   c. Apply an even coat of solvent to the inside of the fitting.

   d. Apply a liberal, even coat of solvent to the outside of the pipe, making sure that the coat area is equal to the depth of the fitting socket.

   e. Insert the pipe quickly into the fitting and turn the pipe approximately one-quarter turn to distribute the solvent and remove air bubbles. Hold the joint for approximately fifteen seconds so the fittings do not push off the pipe.

   f. Using a clean rag, wipe off all excess solvent to prevent weakening at the joint.

   g. Exercise care of going to the next joint so that the pipe is not twisted, thereby disturbing the last completed joint.

   h. Allow at least fifteen minutes setup time for each welded joint before moving.

   i. Repair damaged plastic pipe by replacing the damaged segment.

L. Backflow Prevention Devices: Backflow prevention devices will be installed in a protective cage. The cage will be constructed of 3/16 inch angle steel frame, with No. 9 expanded steel fabric welded to the frame at each point of contact between

the fabric and the frame. The enclosure will include provisions for padlocking, and handles for lifting.

1. For pressure vacuum breakers or atmospheric backflow preventers, a single hinged cage is sufficient.

2. For double-check or reduced-pressure devices, a double hinged cage that opens from the middle is required.

3. The dimensions of the cage will vary depending on the size and type of device required. Consult the enclosed manufacturer's specifications to determine the appropriate model number. A minimum of 15cm (6") clearance is required between the device and the cage.

M. Control Wiring: Lay the wiring from the remote control valves to the controller. Lay alongside the supply mains where practical. Tape wires together at 3m (10ft) intervals. All wiring passing under existing or future paved walks and roads shall be installed inside PVC Schedule 40 Type II pipe sleeve, a of adequate sizes to permit convenient threading of all bundles, as shown on the Plans. Wires shall not be taped together inside conduits. The conduit shall extend at least 30 cm (12") beyond the edges of the paved walks or road.

1. Wire sizes shall be determined by the number of valves operating on a given wire and the distance from the controller to the farthest valve, as specified by the charts furnished by the remote control valve manufacturer. Valve wire may be any color other than white. No splices are permitted. Common ground wire must be white and splices are permitted only at remote control valves.

2. Each remote control valve is to have a dedicated individual 14 GA direct burial wire that is continuous in length to the automatic controller. The common wire is to be 12 GA direct burial and is to be dedicated to the controller it serves. No cross connection of common wires between different controllers will be allowed.

N. Valve Boxes: Carston Industries, Brooks or approved equal, valve boxes shall be set to finished grade.

1. Remote control valves shall be connected and aligned to provide the most efficient flow of water to the irrigation heads. Each valve is to be enclosed in the specified valve box. The valve box shall be secured on firm soil clear of valves and wiring connections.

2. Backfill carefully to prevent settlement and subsequent damage. Each valve box comer is to be set on a brick to prevent settling, with a minimum of .3 m^3 (one cubic foot) of pea gravel installed below the valve.

O. Remote Control Valves: Remote control valves shall be adjusted so that all heads operate within the pressure range recommended by the head manufacturer. Remote control valves shall be adjusted so a uniform distribution of water is applied by the heads to the planting areas for each individual valve system. Make all connections for operation.

P. Flushing of Lines: After all new piping is in place and connected, and all necessary diversion Work has been completed, the control valves shall be opened and a full head of water used to flush out the system.

Q. Pressure Test: The Contractor shall notify all necessary parties 48 hours prior to pressure testing.

1. The Contractor is to center load pipe with small amounts of backfill to prevent arching or slipping of pipe under pressure.

2. All solvent welded pipe joints shall be allowed to set at least 24 hours before any pressure testing can be performed.

3. All pressure lines shall be tested under hydrostatic pressure of (125psi) after installation. The Contractor shall provide all equipment for such tests. Pressure tests will not be required for non pressure lateral lines with swing joints.

4. Pressure shall be sustained in the lines for not less than four (4) hours. If leaks develop, the joints shall be replaced and the tests repeated until the entire system is proven watertight.

5. Tests shall be observed and approved by the City inspector prior to backfill. If irrigation lines are plowed into place, all pipe joints are to be exposed for the pressure test.

6. Upon completion of each phase of the Work, the Contractor shall check and adjust each sprinkler head to meet the Site requirements and Plan.

R. Automatic Controllers: Locate controllers in general locations shown, with exact placement to be determined at the Site by the City's representative.

1. Connect to 120 volt source(s) provided at the Site. Install electrical service pedestal at the connection.

2. Use rigid metal conduit above grade, slab, or floor.

3. Provide and install rechargeable battery backup in controllers per manufacturer's recommendations.

4. Connect control wires to controllers in sequential arrangement according to assigned identification numbers on Plans.

5. Controllers shall be properly grounded per the National Electric Code and conform to local regulations.

6. Controllers shall be programmed so as not to apply excess water. Care shall be taken to prevent runoff and slope/soil erosion caused by prolonged applications of water.

NOTE: CONTRACTOR WILL BE CITED AND FINED FOR WATER WASTE IN ACCORDANCE WITH THE CITY OF FRESNO MUNICIPAL CODE.

7. Solar and battery powered controllers shall be installed per manufacturer's recommendation and as directed by the City inspector.

S. Automatic Controller Schedule: Install automatic controller schedule in laminated plastic or a watertight plastic envelope inside controller cover showing which valves are connected to which stations on controller.

T. Controller Charts: The Contractor shall provide one controller chart for each controller supplied.

1. The chart shall show the area controlled by automatic controller and shall be the maximum size controller door will allow.

2. The chart may be a reduced drawing of the actual "As-Built" system. However, in the event the controller sequence is not legible when the drawing is reduced, it shall be enlarged to a size that will be legible when reduced.

U. Electrical and Lighting Systems: The Contractor shall be responsible for providing an electrical service in a service panel approved by the Engineer. Power will be provided to the irrigation controller, booster pump (if required), lighting system, or any other electrical component as described on the Plans. All circuits will be identified at the service panel.

1. All electrical work shall conform to local codes, ordinances, and regulations.

2. Wires shall not be taped together inside conduits.

3. Lighting systems installed as a component of a landscape design shall conform to all design and materials Specifications on the Plans.

4. Unless otherwise noted on the Plans, security lights along roadways, alleys, walkways, and in parking areas are to be controlled by a single photo cell, which is to be installed at the control panel and according to manufacturer's recommendations. For most installations, the photo cell shall be installed facing north.

5. For maintenance purposes, a test switch that bypasses the photo cell is to be installed in the control panel. The switch is to be identified as the "test." All lighting is to be installed using both time clock and photo cell controls. In larger parks, the security lighting system may be split, having some lights controlled strictly by photo cell and some by time clock/photo cell. Installation shall follow the Plans for the specific system design Specifications.

6. Ornamental or landscape lighting (including low voltage systems) shall be installed using a time clock/photo cell control. These lights are required to have relay switches that are separate from the security lighting system.

7. Electrical outlets located at picnic areas or at the base of light poles are to be “hot” at all times. No more than two double-outlet receptacles are to be on a single 30-amp circuit.

8. Each of the above, as well as any other components of electrical/lighting system are to have individual, labeled circuit breakers (i.e. irrigation controller is **not to share a breaker with security** lighting).

V. Sprinkler Heads: Sprinkler heads located in areas where ground cover planting is indicated shall be set on permanent risers with top of head located above finished grade per detail, rotary pop-up sprinkler heads adjacent to walks or roads shall be set 15cm (6") from edge of walk or road, and pop-up spray heads adjacent to walks or roads shall be set 5cm (2") from edge of walk or roads.

1. Upon completion of the installation, the Contractor shall adjust sprinkler heads to properly distribute water flow and shall place entire irrigation system in correct operating condition.

2. Adjust sprinkler heads that spray toward fences or walls so that water spray does not contact side of buildings.

W. Emitters: Upon completion of the installation, the Contractor shall adjust the drip emitters to properly distribute water flow and shall place entire irrigation system in correct operating condition.

X. Cathodic (Insulation) Protection: Protection shall be installed as follows:

1. Between wrapped galvanized steel pipe and unwrapped galvanized steel or cast iron pipe in ground using couplings or flanges.

2. Between pipes and equipment, except at sprinkler heads and backflow preventer.

3. Between old and new steel piping.

4. Wherever brass, copper, or bronze is installed in contact with or adjacent to steel buried in the ground, and also at insulated fittings, junction shall be wrapped with minimum of two overlapping layers of specified tape. Tape shall follow the contours of the junction and extend 15cm (6") or more over the steel and over the brass fittings or valve as far as practical.

5. Galvanized steel pipe under a concrete slab.

Y. Concrete Equipment Pads: Concrete pads will be provided for all irrigation and electrical equipment in a location approved by the City inspector. All pads will be installed at finished grade and will be a minimum of 6” thick. All pads shall be installed with the slab extending 1.27cm (½”) above finish grade. All pads shall be sloped to drain to matching drainage patters at 0.635cm per 0.3m (1/4" per foot). Unless otherwise directed by the City inspector, the installer will locate the irrigation controller, backflow preventer, and electrical service panel on a common pad.

25-3.3 Backfill and Compaction

A. Backfill shall not be placed until the installed system has been inspected and approved by the City.

1. Backfill material shall be approved soil. Unsuitable material, such as pipe remnants, wire, clods and rocks over 5cm (2") in size, shall be removed from the premises and disposed of legally. Backfill for the first 15cm (6") around the mainline pipe and control wires shall be native soil.

2. All backfilling shall be done carefully and shall be properly tamped. All soil shall be tamped and jetted to eliminate any voids.

3. Surplus earth remaining after backfilling shall be disposed of as directed by the City inspector.

4. Backfilling for all pipe shall be carried out in two basic stages:

   a. Stage One – Backfilling: This shall be accomplished as soon as possible after the pipe is laid. A bedding of uniform depth with no voids must be provided along the entire length of the pipe. The bedding dirt shall be placed in the trench and tamped into the areas under the pipe, using a suitable tool. Joints shall be left exposed until hydrostatic tests are completed. Cover only those portions of the pipe necessary to prevent movement or damage.

   b. Stage Two – Backfilling: This shall be completed after all hydrostatic tests are completed and the piping system has been thoroughly checked for leaks or other defects. Continue to add backfill soil in 10cm (4") layers and hand tamp to achieve a density similar to adjacent soil. After 30cm (12") in main line trenches of hand-tamped soil is in place over the pipe and fittings, backfilling can be continued, using light machinery to place dirt in the trenches in 15cm (6") layers and to compact the dirt to conform to adjacent soil. Extreme care shall be taken to avoid damage to the pipe from machinery that is too heavy. All trenches shall be water-jetted to assure uniform settling and compaction. Backfilling operations will not be considered complete until the top surface has been graded to conform to the adjacent soil. All rocks must be collected and removed from the Site.

5. PVC piping and fittings shall not be backfilled during periods of extreme heat or when a sudden lowering of the temperature of the pipe may cause separation of joints or fittings.

25-4 PART 4 INSPECTION AND TESTS

25-4.1 Periodic Inspections

A. Periodic inspections shall be required for basic operations and installations during progression of the project. It shall be the Contractor's obligation to call and schedule inspections. Such inspections will include but not necessarily be limited to the following items:

1. Grading
2. Layout and fagging of sprinkler heads and system
3. Trenching
4. Pipe and wire placement
5. Partial fill compaction
6. Control valve installation
7. Electrical panel installation
8. Irrigation controller installation and operation
9. Mainline sustained pressure deck
10. booster pump installation
11. Backflow preventer installation
12. Water service installation and meter connection

B. All overtime inspection charges incurred by City personnel shall be paid by the Contractor when inspection services are required outside of normal working hours. Work requiring inspection before or after the normal 8 hours of a normal working day or taking place on holidays, Saturdays and Sundays will be considered overtime inspection.

C. A final inspection of the Work shall be made by the City inspector and City Parks Department Representative in the presence of the Contractor, at the time when all landscaping and irrigation Work is completed. The Contractor shall provide 48 hours notification in advance of such inspection. Prior to the final inspection, the Contractor shall have prepared and transmitted to the City a record set of "As-Built" Plans of the landscaping and irrigation Work. No final inspection will commence without the "As-Built" Plans.

D. In the event that the Contractor schedules an inspection and has not completed the Work that is to be inspected or made an effort to do so, the Contractor will be billed for the cost of the inspection and must remit the cost prior to final approval and inspection of the Work

25-4.2 Testing and Adjustment

A. PVC main lines (upstream of control valves) shall be tested under a gauge pressure of 125 pounds per square inch (psi), said pressure to be maintained for a period of not less than 2 hours. PVC lateral lines (downstream of control valves) shall be tested under a gauge pressure of 75 psi, and pressure to be maintained for a period of not less than one hour. Such tests shall be performed prior to final backfill. All leaks shall be repaired and all defective materials replaced to the satisfaction of the Engineer, and the testing and repairs repeated until the system is approved.

B. Sprinkler heads in proposed turf areas shall be installed one inch above grade and lowered to finish grade after the lawn is established. Any damage to lawn caused by lowering of the heads shall be repaired by the Contractor to the Engineer's satisfaction.

C. After the installation of automatic controller, valves, sprinkler heads, drip emitters and other equipment, the complete system shall be operated in the presence of the Engineer. Any defective or inoperative material shall be repaired or replaced to the

satisfaction of the Engineer. The Contractor shall balance and adjust the various components of the system so the overall operation of the system is most efficient. This includes a synchronization of the controllers, adjustments to heads and emitters, and individual station adjustments on the controllers.

D. When the irrigation system is completed, the Contractor, in the presence of the Engineer, shall perform a test to check the coverage of the system. The Contractor shall inform the City of any deviation from the Plan required due to wind, planting, soil, or conditions that bear on proper coverage.

E. The Contractor shall furnish all materials and labor required to correct any inadequacies of coverage due to Site conditions or unauthorized deviations from the Plans. If such corrections or additions are required in the sprinkler system, the Contractor shall make all adjustments and corrections without any extra cost to the City.

25-5 PART 5 MAINTENANCE AND CLOSE OUT

25-5.1 Maintenance

A. A 90-Day maintenance period will be required for all irrigation systems. This maintenance period will run concurrently with the landscape planting maintenance period. The maintenance period shall begin after all landscape construction activities have been completed, and upon receiving written approval of the Work by the City.

B. It is the Contractor's responsibility to continuously maintain and provide all necessary repairs until a written Notice of final acceptance for maintenance is received from the City. The Contractor shall have the charge and care thereof and shall bear the risk of injury or damage to any part thereof by the action of the elements or from any other cause not the fault of the City. The Contractor shall rebuild, repair, restore, and make good all injuries or damages to any portion of the Work before final acceptance for maintenance.

25-5.2 Completion

A. Upon completion of Work, the Contractor shall provide to the City:

1. Two additional keys to each enclosure and controller box.

2. Two each of any specialized tools required for the operation and/or maintenance of each type of component installed in the system.

3. Other items as specified in the Plans and Specifications.

25-5.3 System Guarantee

A. The entire irrigation system shall be guaranteed by the Contractor to give satisfactory service, and the Contractor shall guarantee the quality of material, equipment and workmanship, including settling of backfilled areas below finish

grade, for a period of one year following the date of the filing of the Notice of Acceptance for all the Work by the City.

B. If, within one year from the date of the filing of the Notice of Acceptance for all of the Work, problems develop resulting from inferior or faulty materials or workmanship, or settlement occurs requiring adjustments in pipes, valves, emitters, heads, sod, or paving to the proper level of the permanent grades, the Contractor, as part of the Work under his Contract, shall make all adjustments and corrections without extra cost to the City, including the complete restoration of damaged planting, paving, or other improvements of any kind.

25-5.4 Measurement

Landscape irrigation systems will be measured by the lump sum for the entire system, complete in every detail.

SECTION 26 – PLANTING SPECIFICATIONS

26-1 PART ONE GENERAL

26-1.1 Scope of Work

A. The Work includes the furnishing of all labor, materials, plants, seed, fertilizer, soil amendments, tools, equipment, transportation, and the performance of all Work required to prepare the soil and plant the lawns, together with maintenance of the planted lawns and cleaning up of the site, all as shown on the Plans, as specified in these Specifications and as directed by the Engineer.

B. Site Protection: The Contractor shall adequately protect the Site, and the Work, erecting barricades, construction fences, or other implementing other protective methods as needed for protection of the Site during both the construction and maintenance period. Replacement and/or repair of any materials, including the labor to effect the Work shall be completed at the Contractor's sole cost at no additional cost to the City. The Contractor shall also protect the adjacent property, and the public, from operations or acts that may damage or harm either, and shall be responsible for any damage, injury or loss due to the Contractor's acts or negligence as determined by the City.

26-1.2 Testing and Inspection

A. After rough grade is approved by the Engineer, the Contractor shall provide agronomic soils testing by a laboratory approved by the City for public landscape areas. The Contractor shall submit test results with soil amendment recommendation to the Engineer for review and approval. The Contractor shall amend soil, prepare backfill and fertilize per Section 26-2.2 of these City Standard Specifications, unless soils test recommendation would cause an unhealthy growing environment.

B. Soil depth in median island areas is to be determined by digging or drilling ½" diameter, 5' deep test holes at locations to be selected by the City inspector. Any asphalt, concrete, road base, or other debris that is encountered is to be removed and replaced with approved topsoil throughout the entire area to be planted.

C. Planting Work shall be subject to special inspections by the Engineer including, but not necessarily limited to, the following items:

1. Grading.
2. Imported soil and soil amendments prior to incorporation into Work.
3. Soil fumigations or weed control operations prior to planting.
4. Placement and arrangement of plant materials prior to planting.
5. Condition of plant material prior to placement.
6. Digging and preparation of plant pits for trees.
7. Planting and staking of trees.

D. All overtime inspection charges incurred by City personnel shall be paid by the Contractor when inspection services are required outside of normal working hours.

Work requiring inspection before or after the normal 8 hours of a normal working day or taking place on holidays Saturdays and Sundays will be considered overtime inspection.

E. A final inspection of the Work shall be made by the City inspector and City Parks Department representative in the presence of the Contractor, at the time when all landscaping and irrigation Work is completed. The Contractor shall provide 48 hours notification in advance of such inspection. Prior to the final inspection, the Contractor shall have prepared and transmitted to the City a record set of "as-built" drawings of the landscaping and irrigation Work. No final inspection will commence without the "as-built" drawings of the landscaping and irrigation Work. No final inspection will commence without the "as-built" drawings.

F. In the event that the Contractor schedules an inspection and has not completed the Work that is to be inspected or made an effort to do so, the Contractor will be billed for the cost of the inspection and must remit the cost prior to final approval and inspection of the Work.

26-2 PART TWO MATERIALS/EXECUTION

26-2.1 Plant Material

A. In all cases, materials shall be furnished as needed to complete Work in quantities designated on the construction Plans or these Specifications, including turf reseeding, redressing and maintenance during construction and the maintenance period. The Contractor shall provide upon request valid invoices to verify amounts of various materials to be used.

B. All plant material shall conform to the requirements of Title 3 (Food and Agriculture) of the California Code of Regulations and these Specifications. All plant material shall be grown in nurseries that have been inspected by the State Department of Food and Agriculture and have complied with its regulations.

C. Plant nomenclature shall be defined by the list of plant materials on the Landscape Planting Plan. All trees, shrubs, and other plants shall be the variety and size shown on the Plans, and shall conform to the requirements herein. All trees, shrubs, and other plants shall be tagged with their botanical and common plant name in accordance with recommendations of the American Nursery and Landscape Association.

D. Substitutions for the indicated plant material will be permitted, provided the substitute materials are approved in advance by the Engineer, and the substitutions are made at no additional cost. All substitute plant material shall conform to the requirements of these Specifications unless otherwise approved by the Engineer.

E. All plant material shall be symmetrical, typical for variety and species, sound, healthy, vigorous, free from plant disease, insect pests or their eggs, mechanical injury, excessive abrasions, or other objectionable disfigurements, and shall have healthy, normal root systems, well filling their containers, but not to the point of being root bound. All plant material shall have a habit of growth that is normal to

the species, and be sound, healthy, and vigorous. Tree trunks shall be sturdy and well hardened off. Trees and shrubs shall not be pruned prior to delivery except as authorized by the City. In no case shall trees or shrubs be topped.

F. All plant material shall have normally well developed branch systems with straight stems, well balanced tops of vigorous growth and vigorous and fibrous root systems which are not root bound. Root condition of plants will be determined by the City removal of earth from the roots of at least two (2) plants but not more than 2% of the total number of species or variety from each source.

26-2.2 Grading and Soil Preparation

A. Before soil preparation is to begin, the entire area that is to be planted shall be finish graded to lines and grades established by the Engineer or as indicated in the construction Plans and Specifications. Filled area shall be sufficiently compacted to prevent settlement when watered. Areas to be cut, or to receive fill, shall have the topsoil stripped and stockpiled before the grading operations begin. After completion of the grading operations, the topsoil is to be replaced in planted areas (lawn and planters). Topsoil stripped from areas to be paved is to be stockpiled and replaced in planted areas. The Contractor is responsible to remove excess soil from the Site, or import additional topsoil -if needed, at no cost to the City.

1. Top soil: Shall be fertile, friable, natural loam, free of subsoil, clay lumps, brush, weeds and other litter, roots, stumps, stones larger than 1" in any dimension, and other extraneous or toxic matter harmful to plant growth. Contractor shall submit a soils analysis of the proposed top soil (see 26-1.2) to be imported for the Work for review and acceptance by the City **BEFORE** delivery to the Site.

2. Fill soil: Upon approval by the City, soil from the Site, free of subsoil, clay lumps, brush, weeds and other litter, roots, stumps, stones larger than 1" in any dimension, and other extraneous or toxic matter harmful to plant growth may be used as fill soil in the project landscape areas. Contractor shall compact all landscape fills to a maximum of 85% after grading, in areas designated for planting only. All other areas shall be compacted per structural requirements of the paving or facility. Top soil, as described in Section 26-2.2A.1 of these City Standard Specifications, may also be used as fill soil at the Contractor's option. Imported fill soil shall be pre-tested and approved by the City as described above.

3. Placement of top soil and fill soil:

   a. Top soil (if required to be imported for the job): Minimum depth in lawn areas shall be an even depth of six inches deep in all landscape areas to be turfed.

   b. All other landscape areas: May be graded and built up with fill soil (or top soil at the Contractor's option) as needed to achieve proper grades and lines as denoted on the project grading Plans.

c. Landscape mounds and berms: If called for, may be formed with fill soil or top soil as described in Sections 26-2.2A.1 and 26-2.2A.2 of these City Standard Specifications.

B. The soil shall not be worked when the moisture content is so great that excessive compaction will occur, nor when it is so dry that dust will form in the air or that clods will not break readily. Water shall be applied if necessary to provide ideal moisture for filling and for planting as herein specified.

C. All areas specified for planting shall be ripped to a depth of at least 20 cm (8") so the soil is loose and friable.

D. In turf areas, the top 7.5 cm (3") of the surface soil shall be cleared of all concrete, stones, roots and similar objects larger than 2.5 cm. (1") in length, wire, sticks and other foreign material. Areas to be seeded shall be evenly graded to present a smooth and even surface free of humps and hollows. Immediately prior to seeding, the surface of the area to be planted shall be sufficiently loose and friable to receive the seed.

E. The Contractor shall legally dispose of all debris.

F. Soil Amendment: Shall be a mixture of humus, wood fibers, organics and a maximum of 50% digested, centrifuged biosolids capable of passing through a 3/8" screen, Earthwise Organics' AGRI-YIELD, Kellogg's Nitro Humas or approved equal. Amendment shall be licensed with the State Department of Food and Agriculture and shall be certified as an organic compound under the California Organics Food Act of 1990 and shall be defined as a Class A material as defined by the United States Environmental Protection Agency, 40 CFR 503. Contractor shall submit laboratory analysis for review and approval by the City before delivering any material proposed as "Amendment" to the Site.

G. Soil amendments: Soil amendments shall be evenly spread and incorporated into all areas designated for planting at the following rates:

1. 4.5 cubic yards (CY) per 1,000 SF which will result in a nominal soil amendment depth of 1 ½ ", over all areas designated for the planting of ornamental ground covers, shrubs, trees, and turf (see Plans).

2. Spread fertilizer and other macro/micro-nutrients over all planting areas designated for planting along with the amendment (where applicable) and incorporate into the soil during the tilling process.

H. Tilling and Incorporation of Amendments: Amendment and fertilizer shall be thoroughly tilled into the soil by rototilling, discing, or other means to a minimum depth of eight (8) inches. This tilling/incorporation process shall be completed separately and after the soil ripping process, and after all major Site Work has been completed in order to minimize further compaction of the planting areas.

I. Fertilizer application requirements during construction: The following fertilizers, micro nutrients, and other additives shall be applied by the Contractor to the soil.

1. 6 lbs of actual/elemental Ammonium based Nitrogen (percentage by weight) per 1,000 square feet (261 lbs/acre) shall be applied to the surface of all landscape planters **after completion of the planting operations** if the Nitrogen source is of a dry granular variety.

2. In the hydraulically seeded areas of the lawn, the Nitrogen shall be applied during the seeding operations as a highly concentrated liquid Nitrogen with a guaranteed analysis of 30-0-0 labeled as Monterey Chemical's Monterey N-SLO 30, Hydro Agri's UREA or approved equal. The concentrated liquid nitrogen shall be formulated of 4.5% Urea Nitrogen, and 25.5% water soluble Methylene Urea (Salt Index = 0%) with a minimum formulation of 3.1 lbs of Nitrogen per gallon of liquid N-SLO 30. N-SLO 30 shall be applied at a rate of 2 gallons per 1,000 SF (87 gallons per acre).

3. 1 lb of elemental/actual Phosphorus (percentage by weight) per 1,000 square feet shall be broadcast onto the soil amendment (**after** the amendment is spread throughout the planters) and tilled into the earth during the ground preparation operations. Phosphorus in the form of P2O5 will **not** be accepted for use on the Site.

4. 1 lb of elemental/actual Potassium (percentage by weight) per 1,000 square feet shall be broadcast onto the soil amendment (after the amendment is spread throughout the planters) and tilled into the earth during the ground preparation operations. Potassium in the form of muriate of potash (K Cl) will not be acceptable for use on the Site.

5. Additional micro nutrients may be specified by the City after the rough grading operations are completed. Any additional applications of chemicals will be contracted by the City in writing as additional work.

6. The fertilizers, micro nutrients, and other additives (excluding the application of nitrogen as described above) shall be incorporated into the soil at the time of incorporation of the soil amendment. Nitrogen shall be surface applied at the conclusion of the planting operations or during the hydraulic seeding process.

7. Some of the planter areas are irrigated with Sub-surface drip irrigation (SDI), and no automatic overhead irrigation is available in these locations. These areas, irrigated with SDI shall be hand irrigated one time in order to move the nitrogen into the soil. The Contractor shall thoroughly saturate the soil so that the water visibly stands on the surface without washing the seed and soil out onto the adjacent pavement.

J. The Contractor shall finish grade all planting areas below the surfaces of all adjacent walks, curbs, mow strips, paved areas, etc., to the depth specified below, in all cases without abrupt changes in gradient:

Turf Areas	15 mm (½)
Tree Shrubs	40 mm (1 ½")
Shrub and Ground Cover	25 mm (1")

26-2.3 Weed Control

A. The Contractor shall notify the City of site conditions prior to planting. All existing weeds shall be removed and/or eradicated as determined by a licensed Pest Control Advisor (PCA) in writing. The Contractor shall verify the method of weed control employed whether by fumigation, chemical methods, mechanical methods or others as determined by a licensed PCA in writing. The Contractor shall use and apply weed control materials in accordance with manufacturers' recommendations and all local codes and ordinances. The materials shall be applied by a licensed applicator.

B. The Contractor shall consistently use recommended weed control methods throughout the construction period. The Contractor will not allow weeds to become established or persist in any portion of the project.

C. Prior to beginning the 90-Day maintenance period, the Contractor shall apply pre-emergent herbicide at the recommended rate on all non-turf areas. The City may require an application of pre-emergent herbicide to turf areas if it is determined to be necessary.

26-2.4 Planting

A. Seeding/Planting shall not commence until all construction Work, clearing and grubbing, grading soil preparation and irrigation system installation is complete. In addition, the functioning irrigation/sprinkler system shall be connected to a permanently installed City water meter prior to any seeding/planting Work.

B. No planting activities are to proceed until the irrigation system is 100% complete and approved by the City.

C. Planting pits shall be dug as required for the individual plant. No plant material shall be planted if the root ball is broken or cracked either before or during the process of planting. Once set, the root ball shall be scored to a depth of 2.5 cm (1") to prevent circling roots.

D. Plants shall be set so that each plant shall bear the same relation to soil level when planted as it did when in container. Generally, trees and shrubs shall be set with the top of the root ball approximately 2.5 cm (1") above the finish grade. Each plant shall be placed in the center of the plant pit.

   Each plant pit shall be backfilled with the following prepared soil mix:

   1. 50% clean native soil.
   2. 50% Agri-yield or approved equal.
   3. Agriform plant tabs, or approved equal.

E. Backfill material in planting pits shall be tamped firm and a shallow basin formed around the plant to hold enough water to saturate the root ball and backfill. Water plants immediately after planting.

F. After plants are set and backfilled, area shall receive mulch as a top dressing as required for the individual plant. Mulch shall be "Walk-on-Bark."

26-2.5 Turf

A. Lawn Seed Mixture

Seed shall be of the quality and mixture specified. Before packaging, the seeds shall be mixed together in a mechanical mixer to obtain thorough dispersion of the various types of seeds. Date on certification tag shall be within five (5) months of the planting date.

B. Two lawn seed mixtures shall be used (determined by planting season) and are designated as Winter Mix and Summer Mix.

C. **Winter Mix with percentages and weights:** FP&R #1 shall be designated as a "winter" mix and shall be used when the seeding is done between September 15 through April 1.

Seeding rate shall be 12 lbs/1,000 SF (523 lbs/acre). Percentages by weight shall be:

Pinnacle Perennial Ryegrass:	35% (4.25 lbs/1,000 SF)
Creeping Red Fescue:	35% (4.25 lbs/1,000 SF)
Cheyene Bermuda Grass:	30% (3.50 lbs/1,000 SF)

In addition, the Contractor shall provide the City with the equivalent of 0.001 kg/m² (2 lbs/1000 sq. ft.) "Yuma" Bermuda grass for over-seeding during summer months. Should the maintenance period extend into the summer season, the Contractor shall be required to plant Bermuda grass in accordance with the following seeding rate for Summer Mix.

D. **Summer Mix with percentages by weights:** FP&R #2 shall be designated as a "summer" mix and shall be used when the seeding is done between April 1 through September 15. Seeding rate shall be 12 lbs/1,000 SF (523 lbs/acre). Percentages by weight shall be:

Pinnacle Perennial Ryegrass:	20% (2.4 lbs/1,000 SF)
Cheyene Bermuda Grass:	80% (9.6 lbs/1,000 SF)

E. The above percentages do not include crop seed, inert matter, etc. All seed shall be delivered to the Work Site in sealed containers with the vendor's tag of certification attached to each container. These shall remain attached to the containers and no seed shall be planted, except in the presence or at the direction of the Engineer. The Engineer reserves the right to take samples from each container for testing to verify certification and conformance with the State Seed law and regulations.

F. The Contractor shall notify the City of Fresno prior to the application or reapplication of the seed.

26-2.6 Turf Fertilizer

A. Commercial fertilizer shall be added evenly to the soil at a rate per thousand square feet to apply approximately 0.45kg (1 lb) of actual nitrogen. The Contractor shall apply fertilizer a minimum of two times. The first fertilization is to occur within 7 Days of the first mowing. The second will occur 60 Days thereafter. The commercial fertilizer shall be homogenous pellet form of a long lasting type of turf fertilizer consisting of both ammoniac and organic nitrogen, phosphorus, potassium (potash), sulfur, and minor elements of iron, zinc, and manganese.

B. The commercial fertilizer shall be Granulated (14-7-33), with an application rate of 0.04 kg/m2 (8 lbs per 1,000 sq. ft).

Ammoniac Nitrogen	4.00%
Organic Nitrogen	10.00%
Total Nitrogen	14.00%
Available Phosphoric Acid	7.00%
Soluble Potash	3.00%
Sulfur	7.00%
Iron	1.60%
Zinc	0.15%
Manganese	0.15%

26-2.7 Planting Turf Seed

A. Hydroseeding is the preferred method for planting turf seed.

B. Hydraulic equipment used for the application of the fertilizer seed and slurry of prepared wood mulch shall be of the "Super Hydro-seeded" type. The equipment shall have a built-in agitation system and operating capacity sufficient to agitate, suspend and homogeneously mix a slurry.

Application rate for hydro-mulching is as follows:

Wood Mulch	0.2 kg/m²	= 40 lbs/1000 sq. ft.
Long Lasting Fertilizer (14-7-3)	0.05 kg/m²	= 10 lbs/1000 sq. ft.
Seed Mixture (Summer Mix)	0.1 kg/m²	= 20 lbs/1000 sq. ft.
(Winter Mix)	0.04 kg/m²	= 8 lbs/1000 sq. ft.
Mulch Binder (Mulch Tackifier)	0.01 kg/m²	= 2 lbs/1000 sq. ft.

C. For some projects, direct sowing of turf seed may be approved by the City. In these instances, the soil is to be moistened prior to seeding. The turf seed will be distributed in an even, uniform manner. Combinations of turf seed varieties will be prepared and evenly mixed prior to the application of the seed. The seed will be planted using a mechanical seeder such as a "Brillion" drill or a Culti-Pack type device. Broadcast-type equipment may be used only for over seeding in established turf areas.

D. The seed beds shall be kept continually moist after turf seed planting. The time interval between "water off' and "water on" irrigation is to be governed strictly by the amount of surface moisture.

26-2.8 Planting Sod

A. Turf areas may be planted by the installation of sod when approved by the City. The variety of sod will be a premium quality, dwarf turf-type tall fescue. The variety of sod is to be submitted to the City in writing for approval.

B. Procedure for installation of Sod will be as follows:

1. Sod must be installed within 8 hours of delivery to the Site. Protect stored or unused sod from damage by heat, sunlight, or any other adverse condition.

2. Handle sod with care. Torn pieces must have ends cut straight. Pieces smaller than 61 cm (24") in length are to be used only for patching or repairs.

3. Lay sod evenly in a staggered pattern of strips, so that the roll ends are consistently at different locations. Lay and fit sod so that all end joints and cuts are free of voids. Sod will be flush with finished grade of adjacent walkways, curbs or other hardscaped areas.

4. Tamp each roll into position against adjacent strips to eliminate gaps, openings or uneven joints.

5. Trim sod to conform to turf area shapes. Expose all sprinklers and valve boxes. Provide a clean straight edge.

6. Roll all sod areas immediately after installation to remove air pockets and provide complete contact between sod and soil.

7. After installation, irrigate sod completely to provide optimum moisture throughout the period of establishment.

26-2.9 Watering

A. After approval of the turf planting operations by the City, the Contractor shall, without flooding, maintain moisture in all planted areas. The areas shall not be watered to the extent of saturating the soil and causing seed "flotation" or "flowing" of the top surface of the soil. After water has once been applied, no portion of the seeded areas shall be allowed to dry out during the entire germination period. The Contractor shall be responsible to alter the watering times and frequencies to meet Site conditions. Irrigate sod thoroughly, so that moisture penetrates through the sod into the soil. Use of a penetrating agent is advised.

26-2.10 Turf Grass Establishment Period

A. The turf grass establishment period begins with the first mowing. The first mowing shall not commence until the grass is generally at least 5 cm (2"), but less than 7.5 cm (3") high. For the second mowing and all subsequent mowings, the mower shall be set to cut at the height of 3.9 cm (1-1/2").

B. Between the fifteenth (15th) Day and the twentieth (20th) Day of the establishment period, the Contractor shall reseed the spots or areas in which normal germination

of the seed is not evident. At the end of thirty (30) Days of the establishment period, the Contractor shall do the following:

- Reseed all spots or areas where normal seed germination is not evident;
- Remove all rocks or other debris that would constitute a hindrance to subsequent mowings;
- Repair all damage done by his/her operations;
- Fill all depressions and eroded channels with sufficient top soil to raise to the proper grade, compact lightly and reseed the filled areas; and
- Roll all seeded and reseeded areas with a 58 kg (125 lb) weight roller to firm the soil around the grass roots and to provide a smooth and even mowing surface.

Following the thirtieth (30th) Day and the ninetieth (90) Day of the establishment period, the lawn shall be maintained by mowing at least once every seven (7) Days. Maintenance shall also include repairing and reseeding damaged areas, as directed by the Engineer. Upon satisfactory completion of the above points, reseeded areas will be accepted by the Engineer provided all other provisions of these Specifications have been complied with by the Contractor. Turf shall be maintained in a weed free condition. Weeds in turf areas will be removed and/or eradicated as recommended by a licensed Pest Control Advisor (PCA) in writing. The turf grass establishment period may overlap with the 90-Day maintenance period.

26-2.11 Trees

A. (15 gallon) Tree Standard

Trees shall be at least 2.0 cm (3/4") in diameter, measured 15 cm (6") from the container soil level. Tree height shall be at least 1.82 m (6') measured from the container soil level.

B. When trees are spaced in rows, the total dimension shall be verified and the trees equally spaced within the designated area. Where trees are shown in an informal pattern, the Contractor shall space the material as shown maintaining an unequal spacing as shown on the Plans and as directed by the Engineer.

C. The Contractor is to ensure that the spacing of trees conforms with the following minimum spacing guidelines. Trees shall be planted:

1. 10 m (3 0') from Street corners and stop signs.
2. 5 m (15') from alleys.
3. 3 m (10') from driveways.
4. 6 m (20') from light poles.
5. 5 m (15') from power poles.
6. 3 m (10') from fire hydrants.
7. 2 m (6') from concrete improvements, unless otherwise shown on the Plans.
8. 2.5 m (8') from Sewer lines.
9. 1 m (3') from gas and electrical lines.
10. 1 m (3') from water lines.

11. 1 m (3') from telephone and cable television lines.
12. 6 m (20') from other acceptable trees.
13. 1 m (3') from adjoining property line.

D. When tree spacing conflicts with the above guidelines, the Contractor is to recommend alternate locations, and contact the Engineer for a ruling.

E. As designated on the Plans. If not designated on the Plans, and reference is made to these Specifications, root barriers shall be manufactured by DeepRoot, Century Products, or approved equal. Linear root barriers shall be a minimum of 12 inches deep. If located in City parkway strip or parking lot planting islands, the barriers shall be placed on each side of the tree, one section against the back of curb, and one section against the front of the sidewalk. In planting islands, the barrier shall completely encircle the island. The necessary length shall be per the as-built conditions in the field. A single drainage hole shall be punched into the barrier to accommodate the drainage hole(s) in the parking lot islands as depicted on the Plans. At a minimum, the root barriers shall be constructed of sections of ribbed plastic or polyurethane material. Ribbed portion shall be facing toward the tree roots. Both round and linear root barriers shall be placed at the same finish grade as the adjacent paving surface, or if no pavement finish grade is evident, place top of root barrier panel one (1) inch above finish grade. Provide manufacturer standard as LB 12-2: root barrier up against the sidewalks, mow strips and slabs and other similar type of hardscape applications.

26-2.12 Drainage Holes and Backfilling for Trees

A. Subsurface soil and conditions may require drainage holes for proper tree development as determined by the Engineer. The Contractor shall provide the required drainage hold by means of drilling as specified herein. A minimum waiting period of twenty (20) Days after drilling shall be completed before any planting can begin. (The Contractor will be responsible for locating all underground Utilities.)

26-2.13 Requirements for Drilling

A. One (1) drainage hole, minimum diameter of 60 cm (24"), shall be drilled for each tree to be planted as designated on the Plans.

B. The depth of the drainage hole shall be determined as follows:

1. The hole must penetrate through and beyond any underlying paving material or hardpan soil stratum. All paving material shall be removed from the drilled hole.

2. The hole shall be drilled to a depth where visual evidence of the subsurface sand or gravel drainage stratum is apparent.

3. If there is no apparent drainage stratum, the drainage hole shall be drilled to a minimum of 3 m (10') deep.

C. After drilling is completed, native soil is to be backfilled in lifts into the hole using the following procedure:

1. Replace 60cm (24") of soil.

2. Thoroughly saturate the backfill with water.

Continue this process until the backfill is complete.

26-2.14 Tree Pits

A. Tree pits shall be dug with level bottoms, width twice the diameter of the root ball and 30cm (12") deeper than length of root ball for deciduous and broadleaf trees and coniferous trees.

26-2.15 Tree Fertilizer

A. During the planting operation, apply (21 gram 20-10-5) Agriform or Best-Tabs planting tablets or approved equal, as follows:

- Position the plant in the hole and backfill halfway up the root ball.

- Place the recommended number of tablets evenly around the perimeter of, and immediately adjacent to, the root ball at a depth which is between the middle and the bottom of the root ball. Completely backfill, tamp firm the soil, and water.

- Apply Agriform Plant Tablets or approved equal as follows:

(1gallon) container plants	-	1 tablet
(5 gallon) container plants	-	3 tablets
(15 gallon) container plants	-	6 tablets
(24") box container plants	-	10 tablets

26-2.16 Tree Staking

A. Stake coniferous evergreen trees with 1 Lodge Pole Pine specified stake on the NW (windward) side of the tree. Stake deciduous and broadleaf trees with 2 Lodge pole pine stakes, I NE and I SW (perpendicular to the wind) from the tree. Stakes shall be vertical, approximately 0.3 m (12") from the tree, and at least 0.3 m (12") into native soil below bottom of tree pit. Stake top shall be below crown of the tree.

1. Provide soft rubber hose tree ties with an enclosed spring loaded action as manufactured by Alden Enterprises "Wonder Tree Ties," "V.I.T. Products Cinch Tie" or approved equal. Ties shall be attached to tree stake as shown in staking detail on the Plans, with the wire portion of the tie securely attached to the stake (to prevent slippage) via staples, nails, or other means. Ties shall hold tree loosely, and not bind tree too rigidly to the stake, allowing an average of 7½ cm (3") of movement in any direction after tree has been tied. Ties shall also be installed so as to straighten trunks to a perpendicular position (to the ground plane) so they are vertically straight. Place all stakes as directed by the City, or if not directed, place parallel to typical wind direction for the area.

2. Provide tree guards as designated on the Plans. If not designated on the Plans, and reference is made to these Specifications, tree guards shall be placed around the base of all tree trunks/stems in both lawn, ground cover, and shrub areas to protect the tree from mechanical damage. Guards shall be of a flexible, expandable, self-opening type, a minimum of 23 cm (9") high, and have the capacity to protect a tree with a minimum basal trunk diameter of 10 cm (4").

26-2.17 Mulching

A. Mulch as top dressing all tree basin areas with "Walk-on-Bark" to a depth of 5 cm (2"). Mulched tree basins shall be a minimum of 81 cm (32") in diameter. Do not engulf the trunks of the trees with humus.

26-2.18 Establishment Period

A. Maintain all basins around trees at a 7½ cm (3") depth.

B. Tree stakes that for any reason are damaged or rendered inadequate for support shall be replaced to their original condition.

C. Maintain trees in their natural shapes. Tall or scraggly branches shall be thinned out where necessary. In no case shall trees be trimmed by heading or shearing. Any plants severely pruned in this manner shall be removed and replaced at Contractor's expense.

D. In all turf areas, maintain a ½ m (1½ ft.) diameter grass free area around each tree. Install arbor guard trunk protective device, or approved equal, on each tree.

26-2.19 Shrubs

A. When shrubs are spaced in rows, the total dimension shall be verified and the plants equally spaced within the designated area. Where shrubs are shown in an informal pattern, the Contractor shall space the material as shown on the Plans, and as desired by the Engineer.

B. Maintain a minimum of 1.0 m (3') of clearance between shrubs and hardscaped features such as sidewalks, curbs, fences, or any such fixture.

C. Shrub pits shall be dug with level bottoms, width twice the diameter of root ball and 30 cm (12") deeper than length of root ball.

D. During the planting operation, apply (21 gram 20-10-5) Agriform or Best-Tabs planting tablets, or approved equal, as follows:

- Position the plant in the hole and backfill halfway up the root ball.

- Place the recommended number of tablets evenly around the perimeter of, and immediately adjacent to, the root ball at a depth which is

between the middle and the bottom of the root ball. Complete backfilling, tamp firm the soil, and water.

- Apply Plant Tablets as follows:

1 Gallon Container Plants	-	1 Tablet
5 Gallon Container Plants	-	3 Tablets
15 Gallon Container Plants	-	6 Tablets

26-2.20 Mulching

A. Mulch as top dressing all shrub basin areas with "Walk-on-Bark" to a depth of 5 cm (2"). Mulched shrub basins shall be a minimum of IV). 60 cm (24") in diameter. Do not engulf the stems of the shrubs with humus.

B. Establishment Period: Maintain all basins around shrubs at a 7½ cm (3") depth.

C. Shrubs shall be maintained in their natural shapes. Overlong or scraggly branches shall be thinned out where necessary. In no case shall shrubs be trimmed by heading or shearing. Any plants severely pruned in this manner shall be removed and replaced at the Contractor's expense.

26-2.21 Ground Cover

A. Where plant material is shown in an informal pattern, the Contractor shall space the material as shown at all times, maintaining spacing as shown on the Plans and as desired by the Engineer. Ground cover material shall be planted in a random pattern and not in straight rows.

B. Ground cover shall be planted sufficiently deep to cover all roots, and spaced as specified in ground cover list on Landscape Planting Plan. At the time of planting all ground cover plants, the earth around each plant shall be firmed sufficiently to force out all air pockets. Alternate procedures in the planting of ground covers shall be approved by the Engineer, but shall not release the Contractor from the noted guarantee described herein.

C. Mulch as top dressing all ground cover basin areas with bark to a depth of 5 cm (2"). Bark shall be "Walk-on-Bark" as manufactured by Fred Horn, Inc., or approved equal.

D. Fertilize ground cover areas as needed during maintenance period.

26-2.22 Tree Transplanting

A. Tree Preparation:

1. <u>Root pruning:</u> All root pruning shall be performed in accordance with "ISA Pruning Standards" (International Society of Arboriculture). Prune all roots to a depth of 60 cm (24"). Pruning location shall be 15 cm (6") inside the tree spade circumference. Pruning shall be performed at least 30 Days

prior to anticipated spading date, or as directed by the Engineer. All pruning cuts shall be clean cut. Any torn root endings shall be trimmed back to create clean cuts.

2. Thinning: Trimming objectives shall be to reduce foliage 10% - 25%, to remove crossing branches, and to remove branches that will interfere with future branch spacing. All cuts shall be performed in accordance with "ISA Pruning Standards." All cuts shall be clean with no ragged edges and shall be made just outside the branch collar. Tree wound dressing shall not be applied to the newly exposed wood. Trimming shall be to a branch no smaller than one-half the size of the branch being removed. Limbs with diameter larger than one-quarter the diameter of the trunk, or branches larger than 15 cm (6") shall not be removed unless said removal has been determined by the Engineer to be necessary to provide tree spade access.

3. Root Ball: The soil shall be moderately moist; damp enough to encourage root tip development, but not so wet as to be unnecessarily heavy.

4. A chalk mark (or in the event of expected rain, an inconspicuous dot of marking paint) shall indicate due north.

B. New Site Preparation:

1. Requirements for Drilling: One (1) drainage hole, minimum diameter of 60 cm (24"), shall be drilled for each tree to be transplanted as designated on the drawings. The Contractor will be responsible for locating all underground Utilities.

   The depth of the drainage hole shall be determined as follows:

   - The hole must penetrate through and beyond the underlying paving material or hardpan soil stratum. All paving material shall be removed from the drilled hole. The hole shall be drilled to a depth where visual evidence of the subsurface sand or gravel drainage stratum is apparent.

   - If no sand or gravel drainage stratum is apparent, the drainage hole shall be drilled to a minimum of 3 m (10') deep.

C. After drilling, water and native soil shall be placed at 60 cm (24") intervals, until all soil is replaced. A minimum waiting period of twenty (20) Days, after drilling, shall be completed before any planting is begun.

1. Requirements for Backfill: A hole shall be excavated to a depth of 1 m (3') and to a diameter so as to create a planting hole extending 1 m (3') beyond the spaded root ball. Any loose hardpan shall be removed from the planting hole. If different layers of soil exist, each stratum shall be loosened and replaced at the same level.

   a. Native soil shall be used for all backfill during Site preparation. Backfill shall be watered in, and allowed to settle for minimum of 20 Days.

Additional native soil shall be added as necessary to maintain ground level during the settling period.

b. Contractor shall spade root ball hole on Day of transplanting.

c. Add peat moss to receiving hole in the quantity listed on the chart below. The peat moss shall be mixed thoroughly in the new hole with enough water such that when the root ball is inserted the peat moss will be forced up around the root ball.

PEAT MOSS RATIO TO ROOT BALL SIZE

Root Ball Size	Peat Moss
45 cm - 60 cm (18" - 24")	0.01 m^3 (½ cubic foot)
60 cm - 81 cm (25" - 32")	0.02 m^3 (3/4 cubic foot)
81 cm - 102 cm (33" - 40")	0.03 m^3 (1 cubic foot)
104 cm - 127 cm (41 " - 50")	0.04 m^3 (1½ cubic feet)
127 cm - 152 cm (51 " - 60")	0.06 m^3 (2 cubic feet)
152 cm - 213 cm (61 " - 84")	0.08 m^3 (3 cubic feet)
213 cm - larger (85" and larger)	0.11 m^3 (4 cubic feet)

D. Transplanting

1. Treespade shall be centered around tree. Cuts made by spade shall be clean; spades shall close at base of root ball; and twisting shall be avoided during the removal of the root ball. Any torn roots shall be trimmed such as to create a clean cut.

2. The root ball shall be protected from drying during holding and transported to the new Site. Protection shall be accomplished by clear plastic shielded from the sun, or by regularly wet burlap. Provision shall be made to dampen the root ball, should holding conditions threaten to allow it to dry out.

3. Limbs shall be tied from the top down as required to prevent injury during handling.

4. Tree shall be oriented at new location such that the original north orientation is maintained. It is especially important to avoid reorienting trees that have been grafted.

5. Tree shall be placed at original soil depth.

6. Agriform plant tabs, or approved equal, 21 gram 20-10-5, shall be placed every 60 cm (24") along the circumference of the root ball 15 cm (6") below the soil line. Backfill material shall be tamped in on all sides of root ball. A berm shall be constructed 60 cm (24") outside the root ball to create a

watering basin. Basin shall be filled with water repeatedly, and backfill probed with a pole to remove all air pockets.

7. Evergreen trees, or deciduous trees in leaf, shall be sprayed with an anti-desiccant as directed and approved by the Engineer.

E. Staking and Guying

1. Tree shall be staked and guyed from three different equidistant points, one of which shall be in line with prevailing winds. The tree shall be protected from direct contact with the cable.

a. Smaller trees 76 cm - 127 cm root ball (30"-50") shall be anchored with wooden stakes and soft wire.

b. Larger trees (greater than 127 cm (50") root ball) shall be anchored with 3 mm or 5 mm (1/8" or 3/16") cable and earth anchors.

c. Tie white surveyor's tape at breast height to each cable.

F. Mulching

1. "Walk-on-Bark" mulch approved by the City to a depth of 7½ cm (3") shall cover the soil surface at a diameter 60 cm (24") wider than the drip line of the tree in order to improve water retention in the soil and to moderate soil temperatures in the summer.

26-3 PART THREE CLOSE OUT

26-3.1 Clean-up

A. After all planting operations are completed, the Contractor shall remove all trash, excess soil, empty plant containers, or other accumulated debris, from the site at no extra cost to the City. Contractor shall repair all scars, ruts or mars in the area caused by work operations. Areas shall be left in a neat and orderly condition. All this Work shall be at the Contractor's expense.

26-3.2 Maintenance Period

A. The Contractor shall continuously maintain all areas included in the Work during the progress of the Work, through all establishment periods and until acceptance of the Work by the Engineer for maintenance.

B. After all irrigation/landscape Work indicated on the City Standard Drawings or herein specified has been completed, inspected, and approved by the Engineer, the City will issue written approval to the Contractor to commence a 90-Day maintenance period.

C. Maintenance period Work includes, at a minimum on a weekly basis, all litter pickup and removal, watering, mowing, edging, weeding, plant replacement, mulching, cultivating, pest and disease control, and trimming necessary to

bring the planted areas to a healthy growing condition and any additional work needed to keep the areas neat and attractive. During the maintenance period, the Contractor shall be charged prevailing rates for all water used.

1. Inspection Intervals & Rejection of Work: During the progress of the maintenance period, the Contractor and the City shall conduct inspections at no less than 30-Day intervals to determine that ongoing maintenance activities have been conducted by the Contractor. If in the opinion of the City, ongoing maintenance has not been conducted by the Contractor in a satisfactory manner, the Work shall be rectified and/or completed by the Contractor and the maintenance period shall begin over again. When reviewed, if landscape maintenance Work does not comply with requirements, replace rejected work and continue specified maintenance until reviewed by City and found to be approved. Remove rejected plants and other materials promptly from Site. Contractor is fully responsible for coordinating with the City closely so that Work passes re-inspection.

D. Prior to the final inspection, the Contractor will apply a pre-emergent herbicide at the recommended rate.

The maintenance period will cease and begin anew any time the Contractor fails to adequately water, replace unsuitable plants, control weeds or perform other Work necessary for the proper establishment of all new landscaping.

E. During the maintenance period, any plant indicating weakness or probability of dying shall be replaced at the Contractor's expense. Constant diligence shall be maintained to prevent disease, insects, and/or rodent infestations and proper preventative or control measures shall be taken. All areas included in the Work shall be substantially clean and free of debris and weeds. All plant materials shall be live, healthy and free of infestations.

F. Any erosion or slipping of soil caused by watering shall be repaired at the Contractor's expense.

G. All walks, curbs and gutters shall be kept clear of debris, mud, dust and standing water by sweeping, mopping or hosing down as required for complete cleanliness.

26-3.3 Closeout/Guarantee

A. All plant and lawn areas shall be guaranteed as to growth and health for a period of one (1) year after acceptance of the Work for maintenance (at the end of the maintenance period).

B. Any areas that are not healthy and growing shall be replaced under this section at no additional cost to the City.

C. The Contractor, within seven (7) Days of written notification by the City, shall remove and replace all guaranteed plant material that for any reason fails to meet the requirements of the guarantee. Replacement shall be made with

plant material as indicated or specified for the first planting, and all such replacement material shall be guaranteed as specified for the original guaranteed material.

D. Operations Manual: Prepare and submit an operations manual as part of maintenance Work at least ten (10) Days before the anticipated final acceptance of the project. Final acceptance for the Contractor's Work shall not be given by the City until the operations manual is fully complete and approved by the City. At a minimum, the operations manual shall include manufacturer standard literature, or neatly typed Contractor generated information sheets certified and approved by the manufacturer. Two (2) original Operations & Maintenance manuals shall be submitted in a loose leaf binder in sections that mirror the project specification manual.

E. As-Built Plans: It shall be the Contractor's responsibility to prepare As-built plans which are professionally drafted and approved by the City before full acceptance of the project is given by the City. Final As-built plans shall be professionally drafted by the Contractor onto reproducible Mylar. Final As-built submittals shall include:

- One (1) full size reproducible Mylar.
- Three sets of full size diazo bluelines.
- One (1) reproducible Mylar at 50% size of the original.
- Three sets of diazo bluelines of the reduction.

The originals and copies shall clearly be marked with the words "AS-BUILT PLANS," and marked with the date of preparation.

SECTION 27 – CONSTRUCTION PLAN SUBMITTALS

27-1 WATER AND SEWER PLAN SUBMITTAL STANDARDS

Submit five sets of plans.

27-1.1 The following shall be submitted with the plans:

A. $460.00 deposit on Plan Check Fee
B. Engineer's Estimate
C. Deeds for Easements
D. Any necessary plans for construction to be done in conjunction with the construction of the sanitary Sewer and/or water.

27-1.2 Original drawings shall be:

A. "C" Size, 36" x 12" as shown on City Standard Drawing No. P-17.
B. Dieterich - Post clear print paper No. 1000-H or approved equal.

27-1.3 The cover drawing shall show the following:

A. Vicinity Map
B. Subdivision Map with Street Names, Scale: 1" = 100'
C. General Construction Notes
D. Property lines
E. Lot or Parcel Numbers
F. North Arrow
G. Scale
H. Benchmark
I. Fee Block
J. Legend
K. Water Division Signature Block
L. Fire Department Signature Block (if applicable)
M. Fresno Irrigation District Signature Block (if applicable)
N. Underground Service Alert (USA) Note
O. List of Material Furnished by the Water Division
P. Engineer's Name, Address, Telephone, Stamp, Expiration Date, Signature, Date of Signing
Q. Owner's Name & Address
R. Complete Title Block
S. Sheet Index Numbers
T. Easements
U. Water System
    a. Size of Pipe
    b. Valve Locations
    c. Fire Hydrant Locations
    d. Blow-offs
    e. Water Services
V. Sanitary Sewer System
    a. Size of Pipe

b. Manholes
c. Slope of Flow Line
d. Flow Line Elevations
e. House Branches
f. Storm Drains, Manholes, and Catch Basins

27-1.4 Each drawing shall show the following:

A. North arrow shall customarily point to the top or right of the drawing
B. Scale
C. Complete Title Block including Street name and project limits
D. Engineer's Stamp, Expiration Date, Signature, Date of Signature
E. Street names and widths
F. Curb patterns and valley gutters
G. Lot lines and lot numbers
H. Easements
I. Sheet numbers for all adjacent sheets

27-1.5 The plan view shall show the following:

A. Sanitary Sewer System
   a. Size of pipe
   b. Pipe material
   c. Manhole size and station
   d. Distance from Sewer to property line
   e. Flow line elevations of all Sewers intersecting a manhole
   f. House branches for each lot with size, length, and station
   g. Total number and size of all house branches for each Street
   h. Slope of the flow line
   i. Existing ground and future elevation of Street centerline
   j. Length, in feet, of Sewer to be installed
   k. All Sewer stubs, size and length
   l. Stationing shall begin from an existing Sewer at the lowest point
   m. Bearing of Sewer
   n. Material and class of backfill to be used in Pipe Embedment Zone

B. Water System
   a. Size of pipe
   b. Pipe material
   c. Distance from main to property line
   d. Length, in feet, of Sewer to be installed
   e. Fire hydrant with station
   f. Valve locations with size, type and station
   g. Location of water service
   h. Station for T's, crosses 45° and 90° Ells, etc.
   i. Blow-off size and station
   j. Bearing of main (in easements only)
   k. Water supply wells and mains within 10 feet of sanitary Sewer main shall be indicated on plans

27-1.6 The profile view shall show the following:

a. Horizontal scale shall be 1" = 40' (1" = 20' may be required if area is congested.)
b. Vertical scale shall be 1” = 4’
c. Existing and proposed ground and/or Street surface profiles

27-1.7 All elevations shall be on United States Geodetic Survey (U.S.G.S.) mean sea level datum adjusted to 1970.

27-1.8 Underground Utilities which may conflict

27-1.9 Sanitary Sewer System

a. Flow line elevation along center line of Sewer
b. Size of pipe
c. Pipe material
d. Slope of the flow line
e. Cut in feet and flow line elevation at each manhole
f. All manholes and their station
g. Length, in feet, of Sewer to be installed
h. Stationing shall begin from an existing Sewer at the lowest point

27-1.10 Water System

A. Top and bottom of the main
B. Size and material of the main
C. Slope of the main
D. Location of all blow-offs, air and vacuum valves, centerlines of intersection Streets and other appurtenances with both station and elevation where applicable.
E. Elevations to nearest 0.10 foot of top of pipe.

27-1.11 Sanitary Sewers located within 50 feet of a water supply well shall be constructed of material to prevent contamination of the well.

27-1.12 The Developer’s engineer shall submit seventeen (17) sets of plans to the City after the plans are signed by the City.

27-1.13 The Developer’s engineer may submit a plan view layout of the water or sanitary sewer system for design suggestions prior to drawing final plans.

27-2 STREET PLAN SUBMITTAL STANDARDS

Submit six sets of plans for tracts.

Submit four sets of plans for miscellaneous developments.

27-2.1 The following shall be submitted with the plans:

A. $460.00 deposit on Plan Check Fee
B. Engineer's Estimate
C. Estimate of UGM work
D. All Deeds for Easements and Dedications
E. Structural section calculations
F. Plans, details, and CIA calculations for ponding basins
G. Any necessary plans for construction to be done in conjunction with the construction of the Street improvements
H. Sanitary Sewer, water, and Storm Drain improvement plans

27-2.2 Original drawing shall be:

A. "C" Size, 36" x 12" as shown on City Standard Drawing No. P-17
B. Dieterich - Post clear print paper No. 1000-H, or approved equal

27-2.3 The cover drawing shall show the following:

A. Vicinity Map
B. Subdivision Map with Street names, Scale 1"=100'
C. General Construction Notes
D. Property Lines
E. Lot or Parcel Numbers
F. North Arrow
G. Scale
H. Benchmark
I. Fee Block
J. Legend
K. Traffic Division Signature Block
L. FMFCD Signature Block
M. County Signature Block (required only if any part of Work is outside the City and in the County)
N. Underground Service Alert (USA) Note
O. Engineer's Name, Address, Telephone, Stamp, Expiration Date, Signature, Date of Signature
P. Owner's Name and Address
Q. Complete Title Block
R. Typical Section
   a. Structural Section
   b. Cross Slopes
   c. Sidewalk Pattern
   d. Right-of-Way Width
S. Sheet Index Numbers

27-2.4 Each drawing shall show the following:

A. North arrow shall point to the top or right of the drawing
B. Scale
C. Complete Title Block including Street name and project limits
D. Engineer's Stamp, Expiration Date, Signature, Date of Signature
E. Site Plan, C.U.P., Rezone, Parcel Map, U.G.M., or F.A.U. Number

27-2.5 The plan view shall show the following:

A. Scale shall be 1" = 40' or 1" = 20'
B. Right-of-way Width
C. Street Width - Curb face to Curb face
D. Sidewalk Pattern
E. Valley Gutters
F. Lot Lines & Lot Numbers or APN's
G. Easements
H. Dedications
I. Driveway Location & Width
J. Existing Utilities

SECTION 28 – TRAFFIC STRIPES AND PAVEMENT MARKINGS

28-1 GENERAL

This Work shall consist of furnishing and applying thermoplastic or solvent borne paint traffic stripes (traffic lines) and pavement markings, including glass beads, and furnishing and placing raised pavement markers at the locations and in accordance with the details shown on the Plans or designated by the Engineer, and as specified in these Specifications.

For the purposes of these Specifications, traffic stripes (traffic lines) are defined as longitudinal centerlines and lanelines which separate traffic lanes in the same or opposing direction of travel, and longitudinal edgelines which mark the edge of the traveled way or the edge of lanes. Pavement markings are defined as transverse markings which include, but are not limited to, word and symbol markings, limit lines (stoplines), crosswalk lines, shoulder markings, parking stall markings, and railroad grade crossing markings. Pavement markers are raised pavement markers, reflectorized or non-reflectorized, of the type and color shown on the Plans and/or set forth in the Specifications.

28-2 MATERIALS

Thermoplastic material and glass beads shall conform to Section 84 of the State Standard Specifications.

Paints shall be solvent-borne, designed for traffic use and shall conform to the latest revisions of the San Joaquin Valley Unified Air Pollution District, Control Architectural Coatings Rule 4601.

Raised pavement markers shall conform to Section 85, “Pavement Markers,” of the State Standard Specifications. Adhesive for raised pavement markers shall conform to Section 95-2.04, “Rapid Set Epoxy Adhesive for Pavement Markers,” of the State Standard Specifications, for rapid set epoxy, or Section 95-2.05, “Standard Set Epoxy Adhesive for Pavement Markers,” of the State Standard Specifications, for standard set epoxy, as directed by the Engineer.

28-3 REMOVAL OF EXISTING MARKINGS

Where called for on the Plans and/or Specifications existing pavement striping, symbols, legend, and markings proposed for removal shall be removed by wet sandblasting or other approved methods which will cause the least possible damage to the pavement. Dry sandblasting may be used in selected areas only with the permission of the Engineer and with approval of the air pollution control authority having jurisdiction over the area in which the Work will be performed. Alternate methods of removal require prior approval of the Engineer.
Where their removal is called for on the Plans and /or Specifications, raised markers shall be removed by an approved method that will result in the least possible damage to the pavement. Where raised pavement markers are to remain, the Contractor shall take special care to protect existing reflective pavement markers and shall, at Contractor’s expense, replace all coated markers.
Where an existing lane stripe is removed, slurry seal shall be applied to the affected areas. Width of the slurry seal application shall be at least three times wider than proposed or

existing stripe, whichever is wider. Where more than one lane stripe is removed in the same travel direction, the extent of the slurry seal application shall be the full pavement width of the travel direction's cross section for the full length of lane stripe removal. Where a series of gore stripes or hatch markings are removed within a travel lane, the extent of slurry seal application shall be the entire travel lane for the length of the gore stripes or hatch markings removal. Where existing pavement legends or symbols are removed, slurry seal shall be applied to the affected areas in a uniform square or rectangle that extends at least six inches past the limits of the removed legend or symbol.
All existing striping, stenciling or raised pavement markers, whether shown for removal or not, that will be in conflict with the intent of any new striping diagram, will be removed. Removal shall be at the direction of the Engineer and no additional compensation will be allowed.

28-4 PLACEMENT OF THERMOPLASTIC TRAFFIC OR SOLVENT-BORNE PAINT STRIPES AND PAVEMENT MARKINGS

Preparation of surfaces and application of thermoplastic or solvent-borne paint material shall conform to all requirements of Sections 84-1.03D, "Surface Prep," and 84-1.03E, "Application of Stripes and Markings," of the State Standard Specifications, and these Specifications. Tolerances and appearance shall conform to the requirements of Section 84-1.03C, "Tolerances and Appearance," of the State Standard Specifications.

Word markings, letters, numerals, legends and symbols shall be applied utilizing suitable approved equipment together with approved stencils and templates. All markings shall be standard, and shall be identical with those used by the City.

When no previously applied figures, markings, or traffic striping are available to serve as a guide, suitable layouts, such as "cat-tracking", shall be spotted in advance of the permanent application. Written approval of temporary layout shall be obtained prior to permanent application.

Where necessary, the Engineer will furnish the necessary control points for all required pavement striping and markings. Alignment and layout of the Work by the Contractor shall conform to Section 84-1.03C, "Tolerances and Appearance," of the State Standard Specifications. The Contractor shall provide an experienced technician to supervise the location, alignment, layout, dimensions, and application of the pavement striping and marking.

In areas of high traffic volume, the Contractor shall schedule Work to apply traffic lines and markings in off-peak traffic hours, or on weekends.

The Contractor shall mark or otherwise delineate the traffic lanes in the new roadway or portion of roadway, or detour before opening it to traffic.

All markings and striping shall be protected from injury and damage of any kind while the material is drying. All adjacent surfaces shall be protected from disfiguration by spatter, splashes, spillage, and dripping of material.

The Contractor shall use proper and sufficient directional signs, warning devises, barricades, pedestals, lights, traffic cones, flag persons, or such other devices to protect the Work, workers and the public.

28-5 PLACEMENT OF RAISED PAVEMENT MARKERS

Preparation of surfaces and placement of raised pavement markers shall conform to the requirements of Sections of 84-1.03D and 84-1.03E of the State Standard Specifications, and these Specifications.

The Contractor shall provide an experienced technician to supervise the application of the raised pavement markers.

In areas of high traffic volume, the Contractor shall schedule Work to apply traffic markers in off-peak traffic hours, or on weekends.

28-6 MEASUREMENT

Quantities of striping and marking pavement shall be measured on a lump sum basis, and shall also include any required removal of existing pavement striping or markings.

28-7 PAYMENT

The lump sum price bid for striping and marking pavement shall include full compensation for furnishing all labor, materials, tools, equipment and incidentals and for doing all the Work involved therein as shown on the Plans, as set forth in the Specifications and as directed by the Engineer. This Work will also include furnishing and installing raised pavement markers where called for and removing existing markings, where called for.

SECTION 29 – CONCRETE MASONRY WALL

29-1 GENERAL

This Work shall consist of furnishing all materials and constructing a concrete masonry wall at the locations as shown on the Plans. Included is the footing construction, reinforcing steel, concrete masonry units and other facilities to complete the wall as indicated on the City Standard Drawings, and as specified herein. Concrete masonry wall shall be installed to the lines and grades shown on the Plans or as directed by the Engineer.

29-2 MATERIALS

Materials for concrete masonry wall construction shall be as follows:

29-2.1 Concrete Masonry Units: Hollow load bearing masonry units shall be Grade A units conforming to the **ASTM** Specifications Designation C90 and in addition the requirements of the Quality Control Standards of the Concrete Masonry Association. All masonry units shall be sound and free of cracks and other defects that would interfere with the proper placing of the unit or impair the strength or permanence of the construction. Minor cracks incidental to the usual method of manufacture, or minor chipping resulting from customary methods of handling in shipment and delivery, shall not be deemed grounds for rejection.

29-2.2 Cement: Cement shall be Type I or Type II Portland cement conforming to **ASTM** Specification Designation C150.

29-2.3 Mortar: Mortar shall be freshly prepared and uniformly mixed in the ratio of one part Portland cement, 1/4 part minimum to ½ part maximum lime putty or hydrated lime, damp loose sand not less than 2½ and not more than 3 times the sum of the volumes of the cement and lime used (4½ parts maximum), and shall conform to **ASTM** Specification Designation C270. If plastic type cement is used, lime putty shall be omitted.

29-2.4 Grout: Grout for pouring or pumping shall be as follows:

A. Grout for pouring shall be of “fluid consistency” and shall conform to **ASTM** Specification Designation C476. “Fluid consistency” shall mean as fluid as possible for pouring without segregation of the constituent parts. It shall be freshly prepared and uniformly mixed in the ratio of volumes as follows:

Type	Grout Space in its Least Dimension (inches)	Portland Cement (parts)	Damp Loose Sand (parts)	Damp Loose Aggregate (parts)
Fine	Less than 3	1	2 1/4 min - 3 max	
Coarse	3 or more	1	2 min - 3 max	1 to 2

B. Grout for pumping shall be of “fluid consistency” as defined above and shall have not less than seven sacks of cement to each cubic yard of grout.

29-2.5 Lime: Hydrated lime shall conform to **ASTM** Specification Designation C207.

29-2.6 Aggregate: Aggregate for mortar shall conform to **ASTM** Specification Designation C144. Aggregate for grout shall conform to **ASTM** Specification Designation C404.

29-2.7 Concrete: Portland cement concrete for footing shall be Class A and conforming to the requirements of Section 90, “Concrete,” of the State Standard Specifications.

29-2.8 Reinforcing steel: Reinforcing steel shall be deformed bars conforming to **ASTM** Specification Designations A15 and A305, except that 0.25" ties may be plain bars. Wire reinforcement shall conform to **ASTM** Specification Designation A82.

29-3 CLEARING AND GRUBBING

Clearing and grubbing shall conform to the requirements of Section 10, “CLEARING AND GRUBBING,” of these City Standard Specifications.

29-4 EXCAVATION AND PREPARATION OF SUBGRADE

Any required excavation or embankment construction for the wall footing shall be to the lines and grades shown on the Plans for established by the Engineer. Excavation, embankment construction and preparation of subgrade shall conform to the requirements of Section 11, “EXCAVATION & GRADING,” of these City Standard Specifications. Unless otherwise indicated, minimum relative compaction of finished subgrade for wall footing shall be 90 percent.

29-5 CONSTRUCTION

The wall and footing construction shall be of the highest quality workmanship and all walls shall be laid true, level, plumb and neat and in accordance with the Plans and the City Standard Drawing pertaining thereto.

Forms for footing construction shall be straight and true. The exposed (after wall construction) finish top surface of the footing shall be a medium sweat finish.

Mortar and grout shall be mixed by placing half of the water and sand in the operating mixer. Then the cement, lime and remainder of the sand and water shall be added. After all ingredients are in the batch mixer, they shall be mechanically mixed for not less than 5 minutes. Hand mixing shall not be employed unless specifically approved. The mortar shall be retempered with water as required to maintain high plasticity. Retempering on mortar boards shall be done only by adding water within a basin formed with the mortar and the mortar reworked into the water. Retempering may only be done prior to hardening of the mortar. Any mortar and grout which is unused after 1½ hours from initial mixing time shall be discarded.

For bonding the masonry to the foundation, the top surface of the concrete foundation shall be clean and with laitance removed and aggregate exposed before starting the masonry construction. The starting joint on foundations shall be laid with full mortar coverage on the bed joint, except the area where grout is to contact the foundation.

Mortar joints shall be straight, clean, and uniform in thickness and shall be tooled. Tooling shall be done when the mortar is partially set but still sufficiently plastic to bond. All tooling shall be done with a tool that compacts the mortar, pressing the excess mortar out of the joint rather than dregging it out. Joints that are not tight at the time of tooling shall be raked out, pointed, and then tooled. If it is necessary to move a masonry unit after it has been once set in place, the unit shall be removed from the wall, cleaned and set in fresh mortar. Lintels, capping units and all bearing plates set by the mason shall be set in a full bed of mortar.

In cases where the wall is in a frontage road island or against an unoccupied area such as railroad rights-of-ways, all cells shall be filled with grout. In other situations, only the cells with reinforcement are to be grouted. All grout shall be paddled or vibrated in place to consolidate without separation. Mortar droppings shall be kept out of the grout space. Mortar that projects into the grout space shall be removed so that protrusions will not restrict the flow of grout (grout will tend to bridge at these locations and require too much puddling or vibration to assure complete filling of grout space). Vertical cells to be filled shall have a vertical alignment to maintain a continuous unobstructed cell area not less than 2" x 3". Grout for cells containing reinforcement shall be stopped 1½" below the top of the course to form a key at pour joints.

Reinforcing bars shall be straight except for bends or hooks as detailed on the City Standard Drawings. Horizontal reinforcing bars shall be laid on the webs of the masonry units in continuous masonry courses, consisting of bond-beam or channel units, and shall be solidly grouted in place. Vertical reinforcing steel shall have a minimum clearance of 0.28" from the masonry, and not less than one bar diameter between bars. Wire reinforcement shall be completely embedded in mortar or grout. Joints with wire reinforcement shall be at least twice the thickness of the wire.

Concrete scum, and grout stains on the wall shall be removed immediately. After the wall is constructed, it shall not be saturated with water for curing or any other purpose. At the conclusion of the masonry work, the Contractor shall clean all the masonry, remove equipment used in the Work, and remove all debris, refuse, and surplus masonry material, and dispose of them away from the premises.

29-5.1 Measurement

Measurement for concrete masonry wall will be by the lineal foot of concrete masonry wall installed as shown on the Plans, to be determined by the Engineer from actual measurement.

29-6 PAYMENT

When the contract does not include a pay item for clearing and grubbing, or for excavation and preparation of subgrade, as above specified, and unless otherwise provided in the Specifications, full compensation for any necessary clearing and grubbing, and any excavation and preparation of subgrade required to prepare the subgrade and pad for the wall foundation, as shown on the Plans or indicated by the Engineer, shall be considered as

included in the price bid for concrete masonry wall and no separate payment will be made therefor.

The unit price bid per lineal foot for concrete masonry wall shall include full compensation for furnishing all labor, materials, tools, equipment and incidentals and for doing all the Work involved therein as shown on the Plans, as set forth in the Specifications, and as directed by the Engineer. This shall include, but not be limited to clearing and preparing the wall pad and subgrade (where no separate item is provided therefor), constructing concrete footing, furnishing and placing reinforcing steel, concrete block, mortar and grout, and all incidentals.

SECTION 31 – TECHNICAL SPECIFICATIONS FOR INTELLIGENT TRANSPORTATION SYSTEMS

31-1 DEFINITIONS

Unless the particular provision or context otherwise requires, the definitions and provisions contained in this Section 31 shall govern the construction, meaning and application of words and phrases used in the conditions in this Section 31. The definition of each word or phrase shall constitute, to the extent applicable, the definition of each word or phrase which is derivative from it, or from which it-is a derivative, as the case may be.

Intelligent Transportation System (ITS): Electronics, communications, or information processing used singly or in combination to improve the efficiency or safety of a surface transportation system.

Qualified Products List (QPL) – City list of approved ITS equipment.

31-2 GENERAL

All equipment and materials shall be certified to meet nationally recognized standards and Listed, Labeled or Identified by the appropriate Nationally Recognized Test Laboratories (NRTL) or Inspection Agencies. All electrical installations shall be in accordance with the NFPA National Electrical Code. Examination, identification, installation, and use of materials and equipment shall be approved by the Engineer, Traffic Engineer or their representative.

All ITS Work must be constructed in accordance with approved Plans prepared by a registered professional engineer and these Specifications.

Existing electrical and communication systems, or approved temporary replacements thereof, shall be kept in effective operation during the progress of the Work, except when shutdown is permitted in writing by the City CM, City CM Engineer or their representative.

The locations of foundations, standards, services, pull boxes and other appurtenances shown on the Plans are approximate. Exact locations and grades will be established as necessary by the City CM, City CM Engineer or their representative.

All Work shall comply with Section 11-104 of the City of Fresno Municipal Code, the National Electrical Manufacturer's Association Standards and all regulations and codes as stated in Section 86-1.02, "Regulations and Code" of the State Standard Specifications.

Nothing in the Plans and Specifications shall be construed to permit Work not complying with these codes.

31-3 MATERIALS

Attention is directed to Section 6, "Control of Materials," of the State Standard Specifications. All materials required to complete the Work under this contract shall be furnished by the Contractor. The materials furnished and used shall be new, except such used materials as may be specifically provided for on the Plans. All Work and materials shall be in full accordance with the latest rules and regulations of the National Board of Fire Underwriters,

local and State laws and regulations, the State of California Industrial Accident Commission's Safety Orders, and regulations of the Pacific Gas and Electric Company pertaining to service equipment and installations thereof.

31-4 EQUIPMENT LIST

Equipment list and drawings shall conform to the provisions in Section 86-1.04, “Equipment List and Drawings,” of the State Standard Specifications.

All equipment and materials that the Contractor proposes to install shall conform to these Specifications and the contract Plans. A list of substitute equipment and/or materials, along with a written descriptive summary, describing the functions of the components which the Contractor proposes to install shall be submitted along with its Proposal. The list shall be complete as to the name of the manufacturer, size and identifying number of each item. The list shall be supplemented by such other data as may be required.

In all cases, the judgment of the respective Electrical Superintendent, the City ITS Supervisor or their representative shall be final as to whether substitute equipment and/or material recommended by the Contractor conforms to the intent of these Specifications and is acceptable for use.

31-5 WARRANTIES, GUARANTEES AND INSTRUCTION SHEETS

Warranties, guarantees and instruction sheets shall conform to the provisions in Section 86-1.05, "Warranties, Guarantees and Instruction Sheets," of the 2006 State Standard Specifications and these Specifications. All equipment furnished shall be guaranteed to the City by the manufacturers for a period of not less than one (1) year, unless otherwise indicated, following the date of acceptance of the signal installation of such equipment. If any part(s) is found to be defective in materials or workmanship within the one-year period, and it is determined by the respective Electrical Superintendent, the City ITS Supervisor or their representative, or by an authorized manufacturer's representative that said part(s) cannot be repaired on the Site, the manufacturer shall provide a replacement part(s) of equal kind and/or type during the repair period and shall be responsible for the removal, handling, repair or replacement and reinstallation of the part(s) until such time as the ITS equipment is functioning as specified and as intended herein. The repair period shall in no event exceed 72 hours, including acquisition of parts.

The one-year guarantee on the repaired or replaced parts shall again commence with the date of reassembly of the system.

All Work performed by the Contractor shall be guaranteed in writing to the City CM, City CM Engineer or their representative for the 12 months from the date of acceptance.

31-6 MAINTAINING EXISTING AND TEMPORARY ELECTRICAL SYSTEMS

The Contractor shall notify the respective Electrical Superintendent, the City ITS Supervisor or their representative at least two full working days (not less than 48 hours) prior to the shutdown of any traffic signal, lighting or communication system. The Contractor may use temporary splices and wiring as approved by the City CM, City CM Engineer or their representative to maintain existing traffic signal and ITS systems. After completion of project, all wiring shall meet City standards. Shutdowns of ITS systems shall be limited to the period

from 9 a.m. to 4 p.m. of normal working days, excluding legal holidays, weekends, and nonworking days as directed by the City CM, City CM Engineer or their representative.

31-7 SCHEDULING OF WORK

Scheduling of Work shall conform to the provisions in Section 86-1.07, "Scheduling of Work" of the State Standard Specifications.

Contractor shall submit a written schedule to the City CM, City CM Engineer or their representative one-week in advance of the start of ITS Work. Any deviation from the approved submitted schedule must be approved by the City CM, City CM Engineer or their representative.

The Contractor shall notify the City CM, City CM Engineer or their representative at least two working days in advance of any electrical Work and also at least two working days in advance of any Work done intermittently to facilitate inspection.

31-8 TRAFFIC CONTROL

Traffic control shall be provided in accordance with the State, "Manual of Traffic Controls for Construction and Maintenance Work Zones," latest Caltrans adopted edition, and Section 7-10, “Public Convenience and Safety,” of the City Standard Specifications.

31-9 36" X 60" ITS VAULT(S)

Vaults shall be concrete with a reinforced spring loaded torsion assisted steel lid, have 18 fiber optic holding racks, and cross bar to hold the lid from closing. All vaults shall have a smooth finished bottom including a sump hole for drainage. The concrete box design shall be reinforced to provide high strength without excess weight. Special knockouts shall be provided and incorporated into the construction of each wall. Each communication conduit entrance shall be sealed with duct plugs and trimmed smooth. Wall penetrations shall be water resistance and seal from the interior to the exterior.

Vault Body and Lid Specifications

Dimensions:

Cover: 36” x 60”
Base: 36” x 60” x 5.25”
Shipping: 2-pc. with C.I. cover
Lid Markings: “ITS COMMUNICATIONS”

Tension assisted spring loaded for light weight checker plate cover with strength galvanizing finish with non-skid surface. Vault shall have sump hole in vault base with 2 ton riss pin for handling. Knockouts shall be on all corners. Knockouts shall be thinwall, 8” x 16,” 4 each per side.

Installation Procedures for 36” X 60” Vault(s)

Conduit entrances to vaults shall be spaced approximately 2 inches from bell edge to bell edge. Provide a uniform separation of conduit bells with complete grouting to make a smooth wall

without blockage of conduit access. Conduits shall extend a minimum of 6 inches, 8 inches maximum, beyond the inner wall of any vault or structure. Start pacing conduits in a gradual taper 10 feet prior to entrance of vault. Use of concrete vibrator shall be required to ensure complete distribution of concrete sand slurry around outside wall of the vault.

Conduit Identification: Identify each conduit using the conduit number shown in drawings by means of a stamped brass tag at each end at access vaults.

All vaults shall rest on a 6 inch layer of crushed rock which extends past the wall of the vault as shown on the City Standard Drawings. The void between the edge of the vault and native soil shall be backfilled with sand.

Vaults shall be installed to matched existing grade and conform to sloped areas for drainage.

All vaults shall be installed with extensions.

All vaults shall be wrapped with building paper prior to backfilling. When the vault is installed in a non-sidewalk area, install a formed concrete apron, 1-foot wide and 4 inches deep around the vault. The apron shall be sloped to drain away from the vault.
Non-Abrasive Non-Slip Coating

Non-Slip Coating shall comply with MIL-W-5044 and shall be applied to all vault covers. Coating shall be a one component, brushable, non-abrasive, non-slip deck coating formulated with fast drying resins. Aggregates shall be non-abrasive and non-sparking and shall not scratch or damage underlying metal surfaces.

Non-slip coating shall be resistant to fire, acids, alkalis, solvents, grease, oil, salt water, detergents, alcohol, gasoline, cellulube and other hydraulic fluids.

Non-slip coating shall be applied over a primer. Two component epoxy primers shall be used. Non-Slip coating shall be applied to a clean, dry surface. All rust, mill scale, paint, dirt, grease, oil, etc. must be completely removed. Methods of cleaning steel surface are as follows:

Wash metal surface with one coat of a wash primer conforming to MIL-C-8514, applied in accordance with MIL-C-8507. Primer shall be applied before coating.

Primer shall be applied on surfaces immediately after the surface has been cleaned and before rust or oxidation.

31-10 48" X 84" ITS VAULT(S)

Vaults shall be concrete with a reinforced spring loaded torsion assisted steel lid, have 18 fiber optic holding rack, and cross bar to hold the lid from closing. All vaults shall have a smooth finished bottom including a sump hole for drainage. The concrete box design shall be reinforced to provide high strength without excess weight. Special knockouts shall be provided and incorporated into the construction of each wall. Each communication conduit entrance shall be sealed with duct plugs and trimmed smooth. Wall penetrations shall be water resistance and seal from the interior to the exterior.

Vault Body and Lid Specifications
Dimensions:

Cover: 48” x 78”
Base: 48” x 78” x 5.25”
Shipping: 2-pc. with C.I. cover
Lid Markings: “ITS COMMUNICATIONS”

Tension assisted spring loaded for light weight checker plate cover with strength galvanizing finish with non-skid surface. Vault shall have sump hole in vault base with 2 ton riss pin for handling. Knockouts shall be on all corners. Knockouts shall be thinwall, 8” x 16”, 4 each per side.

Installation Procedures for 48" X 84" Vault(s)

Conduit entrances to vaults shall be spaced approximately 2 inches from bell edge to bell edge. Provide a uniform separation of conduit bells with complete grouting to make a smooth wall without blockage of conduit access. Conduits shall extend a minimum of 6 inches, 8 inches maximum, beyond the inner wall of any vault or structure. Start pacing conduits in a gradual taper 10 feet prior to entrance of vault. Use of concrete vibrator shall be required to ensure complete distribution of concrete sand slurry around outside wall of the vault.

Conduit Identification: Identify each conduit using the conduit number shown in drawings by means of a stamped brass tag at each end at access vaults.

All vaults shall rest on a 6 inch layer of crushed rock which extends past the wall of the vault as shown on City Standard Drawings. The void between the edge of the vault and native soil shall be backfilled with sand.

Vaults shall be installed to matched existing grade and conform to sloped areas for drainage.

All vaults shall be installed with extensions.

All vaults shall be wrapped with building paper prior to backfilling. When the vault is installed in a non-sidewalk area, install a formed concrete apron, 1-foot wide and 4 inches deep around the vault. The apron shall be sloped to drain away from the vault.

Non-Abrasive Non-Slip Coating

Non-Slip Coating shall comply with MIL-W-5044 and shall be applied to all vault covers. Coating shall be a one component, brushable, non-abrasive, non-slip deck coating formulated with fast drying resins. Aggregates shall be non-abrasive and non-sparking and shall not scratch or damage underlying metal surfaces.

Non-slip coating shall be resistant to fire, acids, alkalis, solvents, grease, oil, salt water, detergents, alcohol, gasoline, cellulube and other hydraulic fluids.

Non-slip coating shall be applied over a primer. Two component epoxy primers shall be used.

Non-Slip coating shall be applied to a clean, dry surface. All rust, mill scale, paint, dirt, grease, oil, etc. must be completely removed. Methods of cleaning steel surface are as follows:

Wash metal surface with one coat of a wash primer conforming to MIL-C-8514, applied in accordance with MIL-C-8507. Primer shall be applied before coating.

Primer shall be applied on surfaces immediately after the surface has been cleaned and before rust or oxidation.

31-11 ITS CONDUITS / FIBER DUCTS

This Specification covers the performance characteristics with minimum and maximum acceptable performance levels for 1.5” SDR 11 conduit. Vendors supplying conduit as described by this Specification shall demonstrate compliance with the values described in this document. All ducts shall be smooth wall, direct burial rated and specifically designed for fiber optic cable. Electrical conduit, PVC pipe, galvanized pipe or other similar products will not be allowed.

It is the intent of these Specifications to define the parameters by which conduit will be evaluated. Furthermore, the Specifications will serve as a guide for the purpose of vendor qualification.

The ITS / Fiber Duct conduits shall include bundles of two (2) – 1-1/2”, four (4)-1-1/2", six (6) 1 1/2", twelve (12) 1-1/2" or one (1) 2” as shown on the Plans.

Material Specifications

Material Specifications

Property	Test Method (ASTM)	Value	Cell Class.
Density (g/cm)	D 792A or D 1505	0.940 -0.955	3
Melt Index (g/10 min)	D 1238	< 0.15	4
Flexural Modulus (psi)	D 790	110,000 -160,000	5
Tensile Strength @ Yield (psi)	D 638	3,000 -3,500	4
ESCR, Condition B	D 16930/10	Failures / 1000 hrs.	7
Hydrostatic Design Basis (psi)	D 2837	Not Pressure Rated	0
Tensile Strength @ Break	D 638	4,500 Min.	
Tensile Elongation @ Break (%)	D 638	750 Min.	
Brittleness Temp. (C)	D 746	< -76	

Conduit Physical Properties:

Dimensional measurements shall be performed on samples removed from each complete length of finished conduit, unless otherwise specified. All dimensions will be expressed in inches and carried out three decimal places. Outer diameter and wall thickness will be provided as a stated standard for each conduit size with a plus/minus tolerance. Inner diameter will be stated as a nominal value.

Dimensional requirements for 1.5” SDR 11 conduit:

Nominal Size	Outside Diameter	Wall Thickness	Nominal Inner Diameter
1.50"	1.900 +/-0.012	0.173 +0.026	1.528"

Ovality shall be expressed as a percent and calculated using IEEE Standards and included with the submittals. The ovality shall be no more than five percent.

The conduit shall have a minimum bend radius equal to twenty inches and shall have a safe working pull strength greater than 3,000 pounds.
Conduit shall be certified by the manufacturer with a Letter of Certification documenting that the conduit meets the performance requirements and material requirements of ASTM F2160. Communication conduit shall be marked with the ASTM F2160 designation.
In the event of a discrepancy between these specifications and ASTM F2160, the requirements of ASTM F2160 shall govern.

Quality Control:

Manufacturer will be responsible for inspecting 100% of the conduit supplied for Conduit Dimensions, Ovality, and Visual Appearance.
Contractor shall provide a Certificate of Compliance that the conduits meet the provisions of this section.

Print Legend:

The conduit shall be printed in intervals of two feet (+/-1%) with a standard print height of ¼" (+/-1/16") and shall contain the following information:

- Current Year
- Manufacturer
- Conduit Diameter
- Wall Thickness
- Product Trade Name
- Sequential Footage Markings

The manufacturer shall be capable of supplying conduit with longitudinal stripes or tracers of the above data in increments of four, at ninety-degree intervals around the circumference of the conduit.

Physical Appearance:

The inside surface is a smooth wall or longitudinal ribbed construction. The outside shall be smooth wall construction and shall be in new condition.

Packaging and Shipping:

The conduit shall be supplied in standard lengths of 3,000 feet and shall be placed on an 80" x 40" x 38" reel (Flange x Drum x Traverse). The HDPE conduit shall be delivered to the Site with Cargo Master Lift Gate service, or approved equal. Each reel shall be tagged with the following information:

- Manufacturer's Shipping Address
- Manufacturer's Product Code
- Length of Conduit
- Product Description
- Tracer Color

- Reel Number and Bar Code
- Certificate of Compliance that the conduits meet the provisions of this section

Pull-Tape:

Pull-tape shall be installed in ALL HDPE conduit as described in this section. The ends of the tape shall be secured to the conduit to ensure that the tape does not draw back into the conduit. Pull tape shall have a pull strength of 1,800 lbs. One conduit shall be installed with a tonable pull tape. Furthermore, there shall be 3% (+/ 0.5%) of excess tape fill inside the final conduit product.

Couplings & Bells:

Coupling: All couplings shall be a compression type fitting.
Communication Bells: Communication bells installed on the ends of conduits shall be joined with a glue compatible with the materials in which it is supplied. Bells shall be installed on each conduit that enters or exits any type of pull box or vault. See Plans and details for sweep and entrance construction requirements for the construction of vaults.

Toneable Conduit (White)

Description:

All HDPE conduit shall have toneable capabilities. Only one conduit in each bundle of conduits is required to have toneable capabilities. This toneable conduit shall be an 18-guage wire built into the wall of the conduit. See detail for conduit splice at the coupler.

Toneable conduit shall be combined with a polyethylene conduit with an integrated toning wire. The toning wire shall have the ability to be 'ripped' or pulled out of the conduit wall with simple hand tools, enabling easy access for toning and/or splicing to subsequent lengths.

Product Details:

The toneable conduit (white) shall be made from high quality high-density polyethylene (HDPE), conforming to the performance criteria as identified in the Material Specifications table above within this section 31-11, "ITS CONDUITS / FIBER DUCTS."

Toneable conduit shall have a wire that is 18-gauge copper clad steel coated with fluoropolymer jacket. The wire shall be embedded in the wall of the conduit. The copper clad steel (CCS) shall be necessary for amount of copper to carry a tone over long distances and shall have a steel core that is durable (copper not allowed). CCS shall easily be ripped out of the wall without breaking the wire. The wire shall meet the specifications listed in this Specification.

The fluoropolymer-coated wire shall be 'ripped' out of the conduit wall using a pair of pliers. The fluoropolymer shall allow the wire to move independent of the conduit eliminating stresses on the wire and conduit, and eases the separation of the wire from the wall of the conduit. The fluoropolymer coating shall provide critical insulative and corrosion protection to the 'exposed' wire.

Toning Function:

Contractor shall test all conduits using a generated signal, or ‘tone’, that is transmitted over a conductor so that the portion of the conductor buried below the earth’s surface can be located without digging or using any special tools. Any conduits that cannot be located using this method of toning shall be removed and replaced.

The tone shall be produced at a very low frequency with a transmitter tuned to a particular frequency. The frequency range available on the transmitter may vary between equipment used and range shall be from 400Hz to about 80 KHz. Transmission power shall be controlled in a range of .033 watts up to 5.0 watts. A ‘radio’ receiver tuned to locater shall be able to transmit frequencies is then used to precisely locate the energized wire.

The set-up requires a transmitter be attached to the conductive material that will act as an ‘antenna’ and a ground plane shall be established at the end of the antenna to close the circuit. Contractor shall proof each toneable conduit to accepted practices and tolerances and to ensure continuity with City representative on walkout proofing. This shall be required of all trench line construction.

Installation Procedure:

Splicing the wire together with insulation shall be conducted. The wire from each Toneable conduit shall be grounded in every vault, pull-box or termination point. Each grounding system shall include a six foot grounding rod and attachment system for the wire installed in each vault, pull-box or termination point. Contractor shall remove the fluoropolymer jacket before crimping the connector. Contractor shall minimize the amount of fluoropolymer jacket to be removed in making the connection, leaving the remainder of the jacket intact to protect the wire from corrosion.

Simple wire splices for 18 AWG copper clad steel wire shall be used and environmentally protected with a self-healing waterproof tape.

All splices below grade shall be environmentally sealed against the elements by the Contractor.

Splices above grade such as inside an enclosure shall have the ends sealed with tape per manufacturer specifications.

At each end of the conduit the wire shall be stripped from the conduit to a length long enough for splicing, or ground for toning.

Toneable Wire:

Shall have “Clean Design” or smooth wall for non-interference during installations.

Shall have high tensile strength copper clad steel 18 AWG wire to transmit tone-able signals over extended distances.

Shall have capabilities to locate with toning equipment from the ground surface.

Shall have Teflon coated toning wire to provide extended underground service.

Shall have easily coupled to provide extended lengths.

Shall have easy/convenient wire “Rip Out” for coupling. “Rip Out” design for toneable wires to be connected outside the coupling maintaining the dry seal.

Colors & Sizes (See Approved Engineered Plans)

Duct Plugs

Duct plugs shall be all high-impact plastic construction with durable elastic gaskets, corrosion proof, water-tight and reusable. Duct plugs shall consist of a bottom and top compression plate, gasket and tightening nut.

Duct plugs shall either be blank or consist of a biplex sealing system or approved equal.
Installation

The Contractor shall pot-hole, daylight and identify the precise location of existing Utilities prior to crossing them with the proposed conduit system. The Contractor shall conduct a USA investigation prior to construction. The Contractor shall also video tape and date all Utility markings prior to construction. Any marked Utility damaged by the Contractor shall be replaced at the expense of the Contractor. The Contractor shall take immediate action to resolve emergency situations.

All spoils from trenching shall be removed daily. Spoils piles will not be allowed to be stored in the Street, on sidewalk, curb & gutter, on private property without written permission.

All trenches and Utility crossings shall be backfilled with a two (2) sack colored (red) sand slurry. Mechanical vibration of the slurry will be required to ensure all voids have been filled. Conduits shall be properly secured by an approved method prior to mechanical vibration. All trenches in the asphalt roadway shall be filled with slurry up to the edges of the asphalt. The trenches shall be protected until the slurry hardens and can be opened to traffic. Slurry of trenches in landscape and dirt areas only needs to cover the top of conduits by 12 inches.

All trenches shall be constructed parallel to the edge of pavement or to the face of curb. Any deviation shall take place in a 50 foot gradual transition. The trench locations vary and will be adjusted for conflicts with utilities. All trenches in the roadway or sidewalks shall not deviate from line (parallel to edge of pavement or curb face) more than three inches unless a 50 foot transition is required.

All landscape irrigation facilities shall be modified as necessary to allow for new conduits. All damaged landscape material, ground cover, grass, plants, etc. shall be replaced in kind. All damaged grass shall be replaced with sod.

At locations where no relocation of existing sprinkler systems are shown on the Plans and the Contractor must disturb said systems in order to complete the Work under this and other items, such as while removing concrete Work and forming new concrete Work, the Contractor shall temporarily cap said line and then return sprinkler systems to service within 48 hours. If Contractor cannot restore service in 48 hours, then Contractor shall make provision for temporary irrigation of affected landscape every 48 hours until permanent irrigation service is restored. The method of temporary irrigation service shall be approved by the City CM, City CM Engineer or their representative.

Tree Diameter (inches)	Distance from Tree Trunk (ft.)
4	1 ¼
5	1 ½
6	1 ¾
7	2
8	2 ¼
9	2 ¼
10	2 ½
11	2 ¾
12	3
13	3 ¼
14	3 ½
15	3 ¾
16	4
17	4 ¼
18	4 ½
19	4 ¾
20	5

Note: When it is absolutely necessary to cut closer than the safe distance from a tree trunk, only cut one side the smallest amount possible. All tree root pruning which is necessary but closer than the safe distance shall be approved by the City CM, City CM Engineer or their representative.

Trenching shall be conducted in areas shown on the Plans and in accordance with Section 16 of the City Standard Specifications. It is the responsibility of the Contractor to identify the location and elevation of all Utilities that intersect the proposed trench alignment. The alignment as shown on the Plans is schematic and may require adjustment in the field. Hand trenching under curb, gutter, utilities and other permanent facilities will be required. A 1 foot separation is required when crossing any structure or other Utility. Maintain a minimum 50 foot transition on both the approach and departure tapers when deviating from the alignment on the Plans.

Backfill of Conduit Trenches

All conduit trenches shall be backfilled with a 2 sack colored (red) sand slurry. If conduit trench is located in landscape areas, stop slurry backfill 12 inches below finished grade. The conduit trench shall be completely filled with the 2 sack colored (red) sand slurry. Slurry shall be scraped smooth as to provide an even road surface. For permanent paving, the trench shall be ground to the width and depth shown on the Plans. The 20 inch trench patch shall be centered on the conduit trench. If the edge of the new 20” trench patch is less than or equal to 2 feet (24”) from the lip of gutter or edge of paving, the entire section (from edge of trench patch to lip of gutter) of paving 3 inches deep shall be removed and replaced.

Minimum Trench Width – 6 inches

Maximum Trench Width – 10 inches

Minimum Trench Patch – 20 inches centered on conduit trench

Minimum Trench Paving Depth– 3 inches

Minimum Trench Paving Width – 18 inches Maximum Trench Paving Width – 42 inches (*)

(*) If edge of Trench Patch is less than or equal to 24 inches from lip of curb or edge of paving, grind and replace entire paved area from edge of trench patch to lip of gutter.

Special Trench Protection Requirements:

All trenches within 3 feet of a 12 foot travel lane or within a pedestrian travel path shall be backfilled with 2 sack (red) sand slurry or trenched plated and opened to vehicular or pedestrian traffic at the end of each working day. Trenches outside of vehicular or pedestrian travel lanes or paths may be appropriately protected and barricaded. See City Standard Specifications and City Standard Drawings for other requirements.

31-12 HORIZONTAL DIRECTIONAL DRILLING

Scope:

A. General:

It is the intent of this Specification to define the acceptable methods and materials for installing high density polyethylene (HDPE) conduit by directional drilling methods.

B. Installation Plan:

1. Seven (7) Days prior to mobilizing equipment, the Contractor shall submit their detailed installation plan to the City CM, City CM Engineer or their representative. The plan shall include a detailed plan and profile of the bores and be plotted at a scale no smaller than 1 inch equals 20 feet horizontal and vertical.

2. The plan shall also include a listing of major equipment and supervisory personnel and a description of the methods to be used.

C. Variations in Plan or Profile:

The Contractor may request changes to the proposed vertical and horizontal alignment of the installation and the location of the entry and exit points. Proposed changes shall be submitted in writing to the City CM, City CM Engineer or their representative and receive approval of the City CM, City CM Engineer or their representative prior to construction.

D. Alignment:

The proposed plan and profile installation locations are based on alignments to accommodate acquired easements, to avoid obstructions, and to properly maintain operation flow velocities.

E. Qualifications:

Directional drilling and conduit installation shall be done only by an experienced Contractor specializing in directional drilling and whose key personnel have at least five (5) years experience in this Work.

Materials:

A. General

High density polyethylene conduit shall be used in HDD installations. All piping system components shall be the products of one manufacturer and shall conform to Section 31-11 of the City Standard Specifications and the latest edition of ASTM D1248, ASTM D3350, and ASTM F714.

B. Piping and Bends:

Piping and Bends shall be extruded from a polyethylene compound and shall conform to the following requirements:

1. The polyethylene resin shall meet or exceed the requirements of ASTM D3350 for PE 3408 material with a cell classification of 335434C, or better.

2. The polyethylene compound shall be suitably protected against degradation by ultraviolet light by means of carbon black, well dispersed by pre-compounding in a concentration of not less than 2 percent.

3. The maximum allowable hoop stress shall be 800 psi at 73.4 degrees F.

4. The conduit manufacturer shall be listed with the Plastic Pipe Institute as meeting the recipe and mixing requirements of the resin manufacturer for the resin used to manufacture the conduit in this project.

5. The conduit and bends shall have a minimum standard dimension ratio (SDR) wall thickness as specified by the City CM, City CM Engineer or their representative.

6. Joining shall be performed by thermal buttfusion in accordance with the manufacturer's recommendations.

Installation:

A. General

1. The Contractor shall install the conduit by means of horizontal directional drilling. The Contractor shall assemble, support, and pretest the conduit prior to installation in the directional drill tunnel.

2. Horizontal directional drilling shall consist of the drilling of a small diameter pilot hole from one end of the alignment to the other, followed by enlarging the hole diameter for the conduit insertion. The exact method and techniques for completing the directionally drilled installation will be determined by the Contractor, subject to the requirements of these City Standard Specifications.

3. The Contractor shall prepare and submit a plan to the City CM, City CM Engineer or their representative for approval for insertion of the HDPE conduit into the opened bore hole. This plan shall include pullback procedure, ballasting, use of rollers, side booms

and side rollers, coating protection, internal cleaning, internal gauging, hydrostatic tests, dewatering, and purging.

4. The required piping shall be assembled in a manner that does not obstruct adjacent roadways or public activities. The Contractor shall erect temporary fencing around the entry and exit conduit staging areas.

B. Tolerances:

1. Conduit installed by the directional drilled method must be located in plan as shown on the City Standard Drawings, and must be no shallower than shown on the City Standard Drawings unless otherwise approved. The Contractor shall plot the actual horizontal and vertical alignment of the pilot bore at intervals not exceeding 30 feet. This "as-built" plan and profile shall be updated as the pilot bore is advanced. The Contractor shall at all times provide and maintain instrumentation that will accurately locate the pilot hole and measure drilling fluid flow and pressure. The Contractor shall grant the City CM, City CM Engineer or their representative access to all data and readout pertaining to the position of the bore head and the fluid pressures and flows. When requested, the Contractor shall provide explanations of this position monitoring and steering equipment. The Contractor shall employ experienced personnel to operate the directional drilling equipment and, in particular, the position monitoring and steering equipment. Information pertaining to the position or inclination of the pilot bores not shall be withheld from the City CM, City CM Engineer or their representative.

2. Each exit point shall be located as shown with an over-length tolerance of 10 feet for directional drills of 1,000 linear feet or less and 40 feet for directional drills of greater than 1,000 linear feet and an alignment tolerance of 5 feet left/right with due consideration of the position of the other exit points and the required permanent easement.

C. Ream and Pullback:

1. **Reaming:** Reaming operations shall be conducted to enlarge the pilot after acceptance of the pilot bore. The number and size of such reaming operations shall be conducted at the discretion of the Contractor.

2. **Pulling Loads:** The maximum allowable pull exerted on the HDPE conduit shall be measured continuously and limited to the maximum allowed by the manufacturer so that the conduit or joints are not over stressed.

3. **Torsion and Stresses:** A swivel shall be used to connect the conduit to the drill conduit to prevent torsional stresses from occurring in the conduit.

4. The lead end of the conduit shall be closed during the pullback operation.

5. **Conduit Support:** The conduit shall be equally supported by rollers and side booms and monitored during installation so as to prevent over stressing or buckling during the pullback operation. Such support/rollers shall be spaced at a maximum of 60 feet on centers, and the rollers to be comprised of a non-abrasive material arranged in a manner to provide support to the bottom and bottom quarter points of the conduit

allowing for free movement of the conduit during pullback. Surface damage shall be repaired by the Contractor before pulling operations resume.

6. The Contractor shall at all times handle the HDPE conduit in a manner that does not over stress the conduit. Vertical and horizontal curves shall be limited so that wall stresses do not exceed 50% of yield stress for flexural bending of the HDPE conduit. If the conduit is buckled or otherwise damaged, the damaged section shall be removed and replaced by the Contractor at its expense. The Contractor shall take appropriate steps during pullback to ensure that the HDPE conduit will be installed without damage.

D. Handling Drilling Fluids and Cuttings:

1. During the drilling, reaming, or pullback operations, the Contractor shall make adequate provisions for handling the drilling fluids, or cuttings at the entry and exit pits. To the greatest extent practical, these fluids must not be discharged into the waterway. When the Contractor's provisions for storage of the fluids or cuttings on Site are exceeded, these materials shall be hauled away to a suitable legal disposal site. The Contractor shall conduct their directional drilling operation in such a manner that drilling fluids are not forced through the subbottom into the waterway. After completion of the directional drilling Work, the entry and exit pit locations shall be restored to original conditions. The Contractor shall comply with all permit provisions.

2. Pits constructed at the entry or exit point area shall be so constructed to completely contain the drill fluid and prevent its escape to the Street.

3. The Contractor shall utilize drilling tools and procedures which will minimize the discharge of any drill fluids. The Contractor shall comply with all mitigation measures listed in the required permits and elsewhere in these Specifications.

4. To the extent practical, the Contractor shall maintain a closed loop drilling fluid system.

5. The Contractor shall minimize drilling fluid disposal quantities by utilizing a drilling fluid cleaning system which allows the returned fluids to be reused.

6. As part of the installation plan specified herein before, the Contractor shall submit a drilling fluid plan which details types of drilling fluids, cleaning and recycling equipment, estimated flow rates, and procedures for minimizing drilling fluid escape.

Drilling Operations:

A. General

The Contractor shall prepare a plan to be submitted for City CM, City CM Engineer or their representative approval which describes the noise reduction program and solids control plant, pilot hole drilling procedure, the reaming operation, and the pullback procedure. All drilling operations shall be performed by supervisors and personnel experienced in horizontal directional drilling. All required support, including drilling tool suppliers, survey systems, mud cleaning, mud disposal, and other required support systems used during this operation shall be provided by the Contractor.

Drill pipe shall be API steel drill pipe, Range 2, Premium Class or higher, Grade S-135 in a diameter sufficient for the torque and longitudinal loads and fluid capacities required for the Work. Only drill pipe inspected under API's Recommended Practice Specification API RP 7G within 30 Days prior to start and certified as double white band or better shall be used. A smoothly drilled pilot hole shall follow the design centerline of the pipe profile and alignment described on the construction drawings. The position of the drill string shall be monitored by the Contractor with the downhole survey instruments. Contractor shall compute the position in the X, Y and Z axis relative to ground surface from downhole survey data a minimum of once per length of each drilling pipe (approximately 31 foot interval). Deviations from the acceptable tolerances described in the Specifications shall be documented and immediately brought to the attention of the City CM, City CM Engineer or their representative for discussion and/or approval.

The profile and alignment defined on the construction drawings for the bores define the minimum depth and radius of curvature. At no point in the drilled profile shall the radius of curvature of the bore be less than 1,600 feet. The Contractor shall maintain and provide to the City CM, City CM Engineer or their representative, upon request, the data generated by the downhole survey tools in a form suitable for independent calculation of the pilot hole profile. Between the water's edge and the entry or exit point the Contractor shall provide and use a separate steering system employing a ground survey grid system, such as "TRU-TRACKER" or equal wherever possible. The exit point shall fall within a rectangle 10 feet wide and 40 feet long centered on the planned exit point.

During the entire operation, waste and leftover drilling fluids from the pits and cuttings shall be dewatered and disposed of in accordance with all permits and regulatory agencies requirements. Remaining water shall be cleaned by Contractor to meet permit requirements. Technical criteria for bentonite shall be as given in API Spec. 13A, Specification for Oil Well Drilling Fluids Material for fresh water drilling fluids. Any modification to the basic drilling fluid involving additives must describe the type of material to be used and be included in Contractor's drilling plan presented to the City CM, City CM Engineer or their representative. The City retains the right to sample and monitor the waste drilling mud, cuttings and water.

B. Environmental Provisions:

The Horizontal Directional Drilling operation is to be operated in a manner to eliminate the discharge of water, drilling mud and cuttings to the adjacent land areas involved during the construction process. The Contractor shall provide equipment and procedures to maximize the recirculation or reuse of drilling mud to minimize waste. All excavated pits used in the drilling operation shall be lined by Contractor with heavy duty plastic sheeting with sealed joints to prevent the migration of drilling fluids and/or ground water. The Contractor shall visit the site and must be aware of all structures and site limitations at the directional drill crossing and provide the City CM, City CM Engineer or their representative with a drilling plan outlining procedures to prevent drilling fluid from adversely affecting the surrounding area.

The general Work areas on the entry and exit sides of the crossing shall be enclosed by a berm to contain unplanned spills or discharge. Waste cuttings and drilling mud shall be processed through a solids control plant comprised as a minimum of sumps, pumps, tanks, desalter/desander, centrifuges, material handlers, and haulers all in a quantity sufficient to perform the cleaning/separating operation without interference with the drilling program. The cuttings and excess drilling fluids shall be dewatered and dried by the Contractor to the extent necessary for disposal in offsite landfills.

Water from the dewatering process shall be treated by the Contractor to meet permit requirements and disposed of locally. The cuttings and water for disposal are subject to being sampled and tested. The construction Site and adjacent areas will be checked frequently for signs of unplanned leaks or seeps. Equipment (graders, shovels, etc.) and materials (such as groundsheets, hay bales, booms, and absorbent pads) for cleanup and contingencies shall be provided in sufficient quantities by the Contractor and maintained at all Sites for use in the event of inadvertent leaks, seeps or spills.

Waste drilling mud and cuttings shall be dewatered, dried, and stock piled such that it can be loaded by a front end loader, transferred to a truck and hauled offsite to a suitable legal disposal site. The maximum allowed water content of these solids is 50% of weight. Due to a limited storage space at the worksites, dewatering and disposal Work shall be concurrent with drilling operations. Treatment of water shall satisfy regulatory agencies before it is discharged.

31-13 QUALIFIED PRODUCTS LIST (QPL)

This Specification covers the purpose, development and maintenance of the Qualified Products List (QPL).

This QPL has been developed as a means for determining what products, suppliers, manufacturers, equipment and methodologies may be used on City ITS projects. The items referenced on the QPL have met the approval of the City in one or more of the following ways:

a. They have been approved by the City Traffic Engineering Division.

b. They have been used successfully before the establishment of a formal approval process.

c. They currently satisfy the City Standard Specifications.

It shall be understood that this Specification is open to refinement and will be under close scrutiny to ensure that the information contained herein is complete and accurate. Over the years many items will be added and deleted.

Many products that may be used in the City will not be represented in this document, because they conform to a generic Specification, and the approval procedure is in accordance with the City Standard Specifications.

Qualified Products List

The City Traffic Engineering Division shall maintain the QPL. The City will confirm that the materials or equipment appearing on the QPL meet the Specifications described in the product specific item or the field tested needs of the City and the ITS. Any material or producer not on the list shall require project specific testing.

In order for a manufacturer to be placed on the QPL, a formal *Qualified Products Evaluation Form* must be submitted with samples of the materials or equipment to the City's Traffic Engineering Division. The materials or equipment shall be required to be submitted for laboratory and field testing for a period of up to 12 months prior to acceptance by the City and placement on the QPL.

Quality Control Testing

The City requires that all producers in the QPL perform quality control (QC) testing on their material. Producers must maintain a complete record of all test reports for the previous two years and current calendar year.

Random Testing and Auditing

The City reserves the right to sample materials on the QPL for testing and to perform audits of test reports. City representatives may sample material from the manufacturing plant, the project Site, and other locations. The City reserves the right to test samples to verify compliance with City Standard Specifications and corresponding supplement Specifications. Producers must maintain a complete record of all test reports for the previous two years and current calendar year.

Disqualification

Products that do not perform or are found to be non-compliant with the City Standard Specifications or the field tested needs of the City and the ITS may be removed from the QPL at any time and remain unlisted until such time that adherence to the Specifications can be verified and the product has undergone satisfactory performance evaluation.

SECTION 32 – WELL DESTRUCTIONS STANDARDS AND PROCEDURES

32-1 GENERAL

This Section 32 of the City Standard Specifications is to provide control parameters for the proper destruction of abandoned wells and water related borings, within and under the influence of the City. The proper destruction of wells is the first step to reduce and protect our groundwater supply from contaminants being transferred from surface and subsurface sources.

32-2 STATEMENT OF AUTHORITY

32-2.1 Local:

It is the purpose and intent of this Section 32 of the City Standard Specifications to describe the requirements for well destructions within the City. All well destruction operations and sealing materials used shall conform to the workmanship and quality of material currently used in the industry and as required herein.

32-2.2 State:

All wells destroyed within the jurisdiction of the City shall comply with these City Standard Specifications and shall be in accordance with:

a. California Water Code Section 13750.5.

b. DWR Bulletin Nos. 74-81 and 74-90.

c. State Environmental Protection Agency, Department of Toxic Substances and Control (DTSC), Monitoring Well Design and Construction for Hydrogeologic Characterization Manual, Section 5.

d. Water Division standards and special instructions when provided.

32-2.3 Authorized Contractor:

a. License

Only Contractors holding a current State C-57 Well Driller license are authorized to destroy wells within the City.

b. Types

The licensed Contractor performing the well destruction operation shall provide and coordinate for all materials, equipment, tools, and labor necessary to destroy the following types of wells. See the DWR standards for definitions:

1. Agriculture Supply Wells

2. Domestic Water Supply Wells

3. Environmental Extraction and Vapor Wells

4. Environmental Monitoring Wells, (MW)

5. Exploratory Boring, including Direct Push, Related to Water

6. Industrial Supply Wells

7. Municipal Water Supply Wells

8. Test Wells, (TW)

32-2.4 Inspection

The well destruction operation will be subject to inspection by the City's authorized representative. Overtime inspection fees are charged for all inspections performed on Saturdays, Sundays, City Holidays, and hours worked by the City inspector other than those of the normal City working hours. All inspections fees, including overtime fees, are to be paid and collected in accordance with the existing City Master Fee Schedule, prior to signing off and finalizing any "Well Destruction Permit."

32-3 PRE-DESTRUCTION PREPARATION

32-3.1 Equipment and Debris Removal

The Contractor shall remove all down-hole pumping equipment and debris from the well, as required pursuant to DWR Bulletin Nos. 74-81 and 74-90 and as directed by the City.

32-3.2 Sediment Removal

Wells with perforated, slotted, or screened casing, shall have all sediment removed from the well prior to the start of well destruction operations. Alternative methods for the removal of sediment are to be submitted to the Water Division for approval.

32-3.3 Casing Destruction

The existing casing shall be evaluated to determine the appropriate destruction requirements in conformance with DWR Bulletin Nos. 74-81 and 74-90, DTSC Standards, and these City Standard Specifications. All wells that are a part of a remediation project require a letter of authorization for their destruction from the appropriate lead regulatory agency. Alternative methods for destroying the well casing shall be submitted to the proper agency for approval. The Project Engineer, Project Geologist, or the licensed Contractor shall sign all documentation.

The Destruction Authorization Documentation, along with a completed Well Permit Application for well destruction, shall be submitted to the Water Division for approval, prior to the start of the well destruction operation.

32-3.4 Video Record

32-3.4.1 Submission Requirements

The Contractor shall submit a DVD video of the well, using a down-hole video camera, to the Water Division for review. The video shall clearly record the entire length of the casing and the entire depth of the well. The City will then review each video and specify the method of well destruction. The following information shall be clearly labeled on the disk and recorded on the video:

- Type of Well
- Address of the Well
- Owner's Name
- Recording Date
- Well Diameter
- Casing Material
- Dynamic Depth Counter

32-3.4.2 Clarity Requirements

The video of the well shall be such that the condition of the well casing is clearly visible. If the video does not meet this clarity requirement, or if the pump equipment, oil, debris, sediment, and other objects are found in the bottom of the well, the video will be used to establish the pre-removal condition of the well. A new video of the well shall be required to provide visual evidence that all undesired material was removed from the well prior to the start of the well destruction operation.

32-3.5 Special Removal and Casing Destruction Inspection

A special inspection by the Water Division will be required for all removal and casing destruction operations when the video shows that the pump, oil, sediment, or debris is in the well, or when the well casing must be destroyed. Call (559) 621-5324 to schedule the inspection appointment. All fees for the special inspections are to be paid in accordance to the current City Master Fee Schedule prior to the start of any Work.

32-4 DESTRUCTION APPLICATION REQUIREMENTS

32-4.1 Application Documentation

Prior to the start of any Well Destruction Operation, the Contractor shall submit the following information to the Water Division for review and approval:

- A Well Destruction Work Plan complying with State and local standards

- A copy of the existing Well Completion Report (DWR form 188)

- A plot plan delineating the well's location on Permit Application

- A completed Well Permit Application, signed by the owner and Contractor
- Payment of the current permit application fee for well destruction
- A DVD video for wells over 2” in diameter
- A volume calculation of the well casing
- A volume calculation of filter pack
- An estimated volume calculation of open bottom
- An estimated volume of required sealing material
- A copy of the “Underground Service Alert” (USA) tag
- A copy of the well destruction Work Plan (MW)
- A copy of State’s well destruction approval documentation (MW)

32-4.2 Permit Application

All wells destroyed within the City shall require a Well Permit Application for destruction, which must be completed and submitted to the Water Division for review and approval. If the permit is not properly completed it will be returned to the applicant for corrections. Each permit application shall be accompanied with Contractor’s proof of C-57 license.

32-4.3 Volume Calculation

32-4.3.1 Well and Filter Volume

The Contractor shall submit a calculation for the estimated volume of the well, including filter pack, and as best practical the estimated volumes of known cavities.

32-4.4 Underground Service Alert (USA)

An Underground Service Alert (USA) is required prior to the start of the well destruction operations. The City falls under the umbrella of USA-North. Call 811 to order a USA for the property where the well is to be destroyed.

32-5 DESTRUCTION OPERATIONS

32-5.1 Excavation Requirement

DWR Bulletin Nos. 74-81 and 74-90 require that the well casing be removed to a depth of five feet within urban areas.

32-5.1.1 Well Accessibility

The two typical scenarios of well placement found in the City, which will determine the method of destruction, are described below:

32-5.1.1.1 Open Access

Wells, with clear and open access will require excavation and the removal of not less than five linear feet of the well casing below the surrounding surface, or

32-5.1.1.2 Restrictive Access

Wells located within a driveway, a patio, or a building, may not require excavation. The well casing shall be cut flush to the existing surface surrounding the well, or as deep as practical. The well shall then be filled to the top of the casing with an approved sealing material, in accordance with these City Standard Specifications.

32-5.1.2 Alternative Methods

The Project Engineer, Project Geologist, or Contractor may submit a signed plan for an alternative method to remove the top five feet of casing to the Water Division for approval. No Work shall proceed until the plan is approved by the Water Division.

32-5.2 Placement of Sealing Material

32-5.2.1 Tremie Pipe

All wells with a completion depth of 30 feet or greater, and have a casing of 4 inches in diameter or less shall require the use of tremie pipe for placing sealing material into the bottom of the well.

All wells found to have more than ten feet of water shall require the use of a tremie pipe for placing the sealing material into the bottom of the well.

The tremie pipe shall be removed from the well in accordance with DWR Bulletin Nos. 74-81 and 74-90. All tremie pipe shall be made of suitable rigid materials.

32-5.2.2 Failed Sealing Operation

Prior to the placement of any sealing material into the well, the well shall be sounded to verify that there has been no significant change in the well depth. If the total volume of the sealing material placed in the well is less than the calculated volume of the well, including the estimated volume of voids in the filter pack, the well destruction operation will be considered to have failed and corrective action shall be required to comply with State codes, or as otherwise directed.

32-5.3 Sealing Materials

32-5.3.1 Submittals

Prior to commencing destruction operations, the Contractor shall submit to the Water Division either, a plant mix design, or calibration info with batch mix specification, for review and approval.

The Contractor shall provide the Water Division all weight tickets for sealing materials delivered for the well destruction.

32-5.3.2 Sealing Material Design Mixtures

The sealing material (cement mixtures) to be used shall conform to one of the following Specifications as defined in the California Water Well Standards of the DWR Bulletin Nos. 74-81 and 74-90.

32-5.3.2.1 Sand Cement

One 94 lb sack of type I/II Portland cement and 188 lbs of sand to 6 gallons of clean water.

32-5.3.2.2 Neat Cement

One 94 lbs sack of type I/II Portland cement to 6 gallons of clean water.

32-5.3.2.3 Cement Bentonite:

One 94 lb sack of type I/II Portland cement and 1.88 lbs bentonite to 8 gallons of water clean.

32-5.4 Pressure Application to Sealing Material

32-5.4.1 Opened Bottom Well

Where well casings are found to have cracks, separations, or holes, a sand cement grout shall be placed in the bottom of the well and not more than 5 feet up from the bottom of the casing. Neat cement shall then be placed on top of the sand cement grout and pressurized in accordance with the below requirement.

32-5.4.2 Screened Well

Wells having louvers, perforations, slots, penetrations, cracks, separations, or holes in the casing walls shall use either sealing mixture Section 32-5.3.2.2, Section 32-5.3.2.3, or in combination with Section 32-5.3.2.1 as specified in these City Standard Specifications.

32-5.4.3 Pressurization of Well

After the placement of sealing material into well, by way of a 2" tremie pipe, 50 PSI of pressure shall be applied and maintained to the top of the well, for not less than 15 minutes. The pressure gauge, used to verify that 50 PSI has been attained, shall extend not less than 3 feet above the top of the casing or finished grade. Alternative pressurization application systems shall be submitted for approval not less than 4 Days before the start of the destruction operation, to the Water Division for review and approval.

32-5.5 Inspection Scheduling

The Contractor shall call (559) 621-5324 to schedule a well destruction inspection with the Water Division - not less than 48 hours prior to the destruction of any well. Inspections are scheduled by a first-in and first-out system. Some inspections may be scheduled beyond the 48-hour time period. Inspections requested to take place after normal working hours are available at the current overtime rate specified in the City Master Fee Schedule.

32-6 TECHNICAL PROBLEMS

The Water Division's authorized representatives shall evaluate well destructions that pose technical problems outside the scope of these City Standard Specifications. Each well shall be destroyed on a case-by-case basis to ensure compliance to State and local standards.

32-7 FINALIZING PERMIT

A well permit is finalized, when the City receives a copy of the completed State Well Completion Report (DWR 188 rev.), signed by the Contractor holding the C-57 license and the fulfillment of these guidelines. The Contractor shall deliver to the City a completed Well Completion Report within ten Days of completing the well destruction operations. The Permit will not be finalized until a properly completed DWR Report is received by the Water Division.

32-8 STANDARD REVISIONS AND MODIFICATIONS

The City from time to time may modify these City Standard Specifications to meet conditions and regulatory requirements as they change.

SECTION 33 – RECYCLED WATER FACILITIES DESIGN CRITERIA

PART I - INTRODUCTION

33-1 DEFINITIONS

Unless the particular provision or context otherwise requires, the definitions and provisions contained in this Section 34 shall govern the construction, meaning and application of words and phrases used in the conditions in this Section 34. The definition of each word or phrase shall constitute, to the extent applicable, the definition of each word or phrase which is derivative from it, or from which it-is a derivative, as the case may be.

"Compression Joint"
A push-on joint that seals by means of the compression of a rubber ring or gasket between the pipe and a bell or coupling.

"Confined" In areas were the hydraulic grade line is above the soffit of the Storm Drain pipe, only watertight joints are allowed and shall comply with Section 61 of the State Standard Specifications.

"Easement" A recorded document in which the land owner gives the City permanent rights to construct and maintain recycled water mains and/or facilities across private property.

"Health Agency"
The State Department of Health Services, or the local health officer with respect to a small water system.

"Mechanical Joint"
A joint comprised of pipe spigot, a follower gland (ring), a mechanical joint gasket and the bell of an adjoining pipe, fitting or valve wherein the joint seal is accomplished by tightening a series of bolts and nuts that compress the gasket against the bell recess and the pipe spigot outside diameter.

"Non-potable Water"
Non-potable water is water that may contain objectionable pollution, contamination, minerals, or bacterial agents and is considered unsafe and/or unpalatable for drinking.

"Pantone" A color standard system referenced in the American Water Works Association California-Nevada Section Guidelines for Distribution of Nonpotable Water

"Pressure Class"
See definition for "Rated Working Water Pressure" below.

"Rated Working Water Pressure"
A pipe classification system based upon internal working pressure of fluid in the pipe, type of pipe material, and the thickness of the pipe wall.

"Recycled Water" and "Reclaimed Water"
Non-potable water that is the treated effluent from a wastewater treatment facility. The terms are identical and any reference to reclaimed water refers to recycled water and vice versa.

"Restrained Joints"
A non-standard or modified push-on or Mechanical Joint that is capable of preventing internal pressures or external forces from causing the joint to separate without the use of thrust blocks.

"Sleeve" A protective tube of steel with a wall thickness of not less than one fourth inch into which a pipe is inserted.

"Vertical Separation"
The difference in elevation between the outside bottom of the higher pipe and the outside top of the lower pipe.

"Water Supplier"
Any person who owns or operates a public water system.

33-2 OTHER REQUIREMENTS

Ordinances, requirements, and applicable standards of governmental agencies having jurisdiction within the area served by the Department of Public Utilities shall be observed in the design and construction of recycled water mains and facilities.

Such requirements include, but are not limited to, current revision of the following:

33-2.1 Standard Specifications for Public Works Construction, "latest edition, including all applicable supplements, prepared and promulgated by the California Chapter of the American Public Works Assn. and the Associated General Contractors of America."

33-2.2 State Health laws and regulations regulating the separation between water supply, recycled water and sewerage facilities.

33-2.3 State Uniform Plumbing code as adopted by the City of Fresno.

33-2.4 Road encroachment regulations of the City of Fresno, County, State of California, Fresno Irrigation District, and railroad permits where applicable.

33-2.5 American Water Works Association Standards

33-2.6 Titles 17 and 22 of the State Health and Safety Code regulating cross connection control and back-flow prevention and Chapter 6 of the City of Fresno Municipal Code, regulating cross connections for the City water system.

PART II – GENERAL PROVISIONS

33-3 OTHER REQUIREMENTS

Ordinances, requirements, and applicable standards of governmental agencies having jurisdiction within the area served by the Department of Public Utilities shall be observed in the design and construction of recycled water mains and facilities.

Such requirements include, but are not limited to, current revision of the following:

33-3.1 Scope

The design and construction of recycled water mains, facilities and other appurtenances for the City shall comply with these City Standard Specifications, or permit requirements of various governing bodies, except where specific modifications have been approved by the Engineer, in writing. A tentative plan must be submitted for comment prior to final design. All final Plans submitted by the Developer shall be signed by a registered civil engineer and all Work shall be in accordance with good engineering practice.

33-3.2 Standard Criteria

The City Standard Specifications set forth the procedure for designing and preparing Plans and Specifications for recycled water mains, facilities and appurtenances to be built within the City's recycled water service area. These standards shall include the Specifications on design and installation of ductile iron pipe and polyvinyl chloride (PVC) pressure pipe.

Whenever potable water, recycled water and sanitary sewer plans are to be designed and installed under one project, said work shall be shown on the same construction plans. In this case the Developer's engineer shall supply the City the original vellum or mylar for the final record.

33-4 ENFORCEMENTS

Provisions of these design and construction standards shall be enforced by the Engineer.

PART III – DESIGN CRITERIA

33-5 RECYCLED WATER MAIN PRESSURES, CAPACITIES, AND SIZES

33-5.1 Quantity of Recycled Water Flow

Recycled water needs shall be determined from maximum potential population and land use of the area to be served. For design purposes, the design recycled water flow shall equal the peak hour demand. In order to determine the design recycled water flow, the following criteria shall be used, unless otherwise approved by the Engineer.

33-5.2 Pressure

Recycled water mains shall be designed so that service pressures range between 45 and 60 psi.

33-5.3 Velocity

Recycled water mains shall be designed such that the mean velocity does not exceed five (5) feet per second under Maximum Daily Demand flow conditions.

33-5.4 Head Loss

Recycled water mains shall be designed to provide a mean head loss of not more than five (5) feet per thousand feet of pipe under Maximum Daily Demand flow.

33-5.5 Hazen-Williams "C"

Pipe analysis shall be performed by assuming a value of 110 for Hazen-Williams co-efficient "C".

33-5.6 Minimum Recycled Water Main Size

Recycled water mains shall have an inside diameter of six (6) inches or more. Four (4) inch mains may be permitted by the Engineer for cul-de-sacs that are 150 feet and shorter when the main serves less than five services.

33-6 LOCATION OF AIR RELEASE VALVE ASSEMBLIES

Air release valve assemblies shall be located at all points where air pockets may form and at locations shown and/or established by the Engineer.

33-7 LOCATION OF BLOW-OFF ASSEMBLIES

Blow-off assemblies shall be located at low points and dead ends, where sediment may collect. Design class shall be compatible with the pipeline working pressure.

33-8 RECYCLED WATER MAIN LOCATIONS

33-8.1 Recycled Water Main Location in Roads or Streets

The centerline of recycled water mains shall be located in public Streets in accordance with Drawing P-41, P-42 and RW-12 of City Standard Drawings. A minimum of four (4) feet of clearance must be maintained between parallel sewer and recycled water lines. Recycled water line locations shall be dimensioned from property line and centerline or section line of the street.

33-8.2 Curved Recycled Water Main Requirements

In curved streets the recycled water main shall not cross the center line, but shall follow the street curvature using join deflections or fittings or as shown on the drawings. Bending of PVC pipe barrels to accomplish horizontal and vertical curves is not permitted.

33-8.3 Joint Deflection for Curved Recycled Water Main

Deflection in joints of pipe shall be as limited by manufacturers recommendation.

33-8.4 Elbows

Elbow shall be placed at locations where coupling deflection would exceed the allowable, as limited by manufacturer's recommendation.

33-8.5 Recycled Water-Water-Sewer Separation

The provisions of State Health Codes shall be met in locating recycled water mains.

33-9 CRITERIA FOR THE SEPARATION

33-9.1 Basic Separation Standards

The "California Waterworks Standards" set forth the minimum separation requirements for recycled water and water main lines. These Standards, contained in Title 22 California Code of Regulations 64572 specify:

a) Parallel Construction:
The horizontal distance between pressure water mains, recycled water lines and sewer lines shall be at least 4 feet.

b) Perpendicular Construction (crossing):
Pressure water mains shall be at least one foot above sanitary sewer and recycled water lines where these lines must cross.

c) Separation distances specified in a) shall be measured from the nearest edges of the facilities.

d) Common Trench:
Water mains and recycled water lines must not be installed in the same trench. When water and recycled water mains are not adequately separated, the potential for contamination of the water main supply increases. Therefore, when adequate physical separation cannot be attained, an increase in the factor of safety shall be provided by increasing the structural integrity of both the pipe materials and joints.

33-9.2 Basic Separation Standards

Local conditions such as available space, limited slope, existing structure, etc., may create a situation where there is no alternative but to install water mains or recycled water lines at a distance less than required by the Basic Separation Standards. In such cases, alternative construction criteria may be allowed in very special circumstances. Detail shall be submitted to City Engineer and Health Agency for approval prior to construction.

Water mains and supply lines of 24" diameter or greater may create special hazards because of the large volumes of flow. Therefore, installations of water mains and supply lines 24 inches diameter or larger shall be reviewed and approved by the Health Agency and City Engineer prior to construction.

33-9.3 Special Provisions

The Basic Separation Standards are applicable under normal conditions for recycled lines and water distribution mains. More stringent requirements may be necessary if conditions, such as, high groundwater exist.

New recycled water mains and sewers shall be pressure tested where the conduits are located ten feet apart or less.

In the installation of recycled water or water mains, measures shall be taken to prevent or minimize disturbances of the existing line. Disturbance of the supporting base of this line could eventually result in failure of this existing pipe.

Special consideration shall be given to the selection of pipe materials if corrosive conditions are likely to exist. These conditions may be due to soil type and/or the nature of the fluid conveyed in the conduit.

33-10 ALTERNATE CRITERIA FOR CONSTRUCTION

When new water mains, new sanitary sewer mains, or other non-potable fluid-carrying pipeline are being installed in existing developed areas, local conditions (e.g., available space, limited slope, existing structures) may create a situation in which there is no alternative but to install water mains, sanitary sewer mains, or other non-potable pipelines at a distance less than that is required by the regulations (Section 64572). In such cases, through permit action, the Engineering Department may approve alternate construction criteria. The alternate approval is allowed under Title 22 California Code of Regulations, Section 64551(c).

33-11 PROCEDURE FOR WATER, RECYCLED WATER AND SEWER SYSTEM INSTALLATIONS IN SUBDIVISIONS

m. Installation of all sewer mains, laterals and manholes and backfill.

n. Installation of all recycled water mains, services and backfill.

o. Installation of all water mains, services and backfill

p. Compact all Sewer trenches.
   - d1. Make preliminary pressure test. (Optional)
   - d2. Locate and repair leaks, if any.
   - d3. Recompact if necessary.

q. Compact all recycled water trenches.
   - e1. Make preliminary pressure test. (Optional)

e2. Locate and repair leaks, if any.
e3. Recompact if necessary.

r. Compact all water trenches.

f1. Make preliminary pressure test. (Optional)
f2. Locate and repair leaks, if any.
f3. Recompact if necessary.

s. Items (d), (e) and (f) may be done simultaneously if conditions permit.

t. All trenches shall be identified. Contractor shall also locate and mark Sewer, Water and Recycled water service laterals on curb face when constructed.

u. Compaction tests on sewer, water and recycled water taken by City.

v. Final air test for sewer and pressure test for water and recycled water, providing all leaks are repaired all compaction tests have been approved.

w. Any failure of final tests would require Contractor to reinitiate sequence of work starting with Item (i).

x. The Department of Public Utilities will construct the wet tie to connect to the City's system. This will allow the Contractor to sterilize and flush the newly constructed system. There is often an associated charge for the construction of these wet ties.

y. Flushing recycled water mains shall not be allowed in Street area if it conflicts with sewer and water installations. Often done after compaction tests have passed. Water seeps into trenches and holds up Developer's paving while Street dries out.

z. If storm sewers are to be installed, they shall be constructed first, unless otherwise directed.

33-12 EASEMENTS

Non-metallic pipes may be allowed in Easements which are neither confined or interior Easements.

33-12.1 Easements

The minimum width of a recycled water facility Easement shall be approved by the Engineer.

33-12.2 Recycled Water Main Location in Easement

The recycled water main shall be located 5 feet north or west of the center line of the Easement except where otherwise approved by the Engineer.

33-12.3 Where Easements Follow Common Lot Lines

The full Easement width shall be on one lot, in such a manner that access to lines will not be obstructed by walls, trees, or permanent improvements. Where this requirement cannot be met without interfering with existing buildings, easements may straddle lot lines, but the recycled water line shall not be located on the lot lines.

33-12.4 Deeds for Easements

Deeds for Easements shall provide for restrictions of permanent construction within the Easement to provide ingress and egress for maintenance. A recent title report will be required prior to acceptance of the Easement.

33-12.5 Dedications

Dedications shall be in accordance with City standard practice.

(C) For subdivision tracts the owners of land included within the subdivision shall provide a bill of sale on a form provided by the City. This bill of sale shall be a part of the acceptance of the subdivision.

(D) For other than subdivision tracts, the following shall be conveyed to the City:

(1) A deed of Easement satisfactory to the City for the operation maintenance of the recycled water facilities shall be prepared by a registered engineer or land surveyor, on City Easement forms properly executed by the owners;

(2) A bill of sale to the City for the recycled water mains and appurtenances.

33-13 DEPTH OF RECYCLED WATER MAINS

33-13.1 Basic Requirements

Recycled water mains shall be installed at a depth which shall be in accordance with the applicable ordinances, regulating the separation between water supply and sewerage facilities.

33-13.2 Standard Depths

Minimum depth shall be 42 inches to top of pipe measured from Street or surface above the pipe. Where the natural ground above the pipeline trench has been over-excavated and/or the pipeline is to be placed in the new embankment, embankment material shall be placed and compacted to an elevation of not less than 3 feet above the top of pipe prior to the trench excavation. Where 42 inches from top of curb cannot be maintained, pipe shall be installed with selected or imported bedding as approved by the Engineer or metallic pipe material shall be used.

33-13.3 Exceptions

Designs not in accordance with City Standard Drawing No. RW-12 shall be submitted to the Engineer for approval together with evidence that it complies with City Standard Drawing No. RW-12.

33-14 STRUCTURAL REQUIREMENTS

33-14.1 Buried Facilities

All structures and pipe placed underground shall be of sufficient strength to support with an adequate factor of safety the following applicable loads: the backfill, road surfacing, H-20 truck loading with impact, high loading to be specified by the Engineer or as required by permits for crossing State highways, railroad tracks, canals, and streams. Calculations showing factor of safety may be required by the Engineer.

33-14.2 Other Pipes and Structures

Recycled water lines designed to cross under other pipes or structures shall be protected from damage and shall be constructed in order not to endanger the other pipe or structure. Minimum clearance between outside of pipes or between pipes and other structures is 12 inches unless otherwise approved by the Engineer.

33-14.3 Flexible Joints

Flexible joints which will allow for differential settlements or other movement of recycled water pipe, facilities, adjacent pipe and adjacent structures shall be provided where recycled water lines enter encasements or other structures. Flexible joints shall be within three feet of such structures. Any deviations from these requirements shall require approval from the Engineer.

33-14.4 Thrust Blocks

The use of concrete thrust blocks may be required but will only be allowed when specifically approved in writing by the Engineer.

33-14.5 Mechanical Restrained Joints

Restrained Joint fittings shall be provided at all tees, crosses, reducers, bends, caps, plugs and valves such that the pipe is fully restrained in any one given direction.

These shall meet Uni-B-13 and ASTM F 1674-96 for PVC and be UL/FM approved through 12" for both ductile iron and PVC. The restraint mechanism shall consist of individually activated gripping surfaces to maximize restraint capability. Twist-off nuts, sized the same as the tee-head bolts, shall be used to ensure proper activating of restraining devices. The gland shall be manufactured of ductile iron conforming to ASTM A536-80. The retainer-gland shall have a pressure rating equal to that of the pipe on which it is used through 14" with a minimum safety factor of 2:1. See City Standard Drawings W-31, W-32, W-33, W-34, W-35, W-36 and W-37. Gland shall be Megalug by EBAA Iron, Inc., Uni-Flange by Ford Meter Box Co. Inc., or approved equal.

Push-on Restraint: When it is necessary to restrain push-on joints adjacent to restrained fittings, a harness restraint device shall be used. All harnesses shall have a pressure rating equal to that of the pipe on which it is used through 14". Harness assemblies including tie bolts shall be manufactured of ductile iron conforming to ASTM A536-80. Harness shall be manufactured by EBAA Iron, Inc., Ford Meter Box Co. Inc., or approved equal.

33-15 DESIGN CRITERIA FOR RECYCLED WATER METERS

The City shall determine the appropriate meter sizes and types, based on the building plumbing plans and the landscape sprinkler plans furnished by the Developer.

PART IV – MATERIALS

33-16 REQUIREMENTS

Materials shall be chosen for their strength, durability and ease of maintenance, with due consideration for dead and live loads, beam strength and resistance to corrosion. Pipe joints shall be selected to provide sufficient flexibility to adjust to the residual conditions during and after construction.

33-17 PIPE MATERIALS

The following are acceptable materials for recycled water line construction:

33-17.1 Ductile Iron Pipe and Ductile Iron Fittings

Ductile iron pipe and associated fittings shall conform to the applicable sections of the City Standard Specifications.

(g) Fabrication

Ductile iron pipe shall be Pressure Class 350 ductile iron for sizes up to and including 12 inch and Pressure Class 250 ductile iron from 14 inch to 20 inch; complete with all accessories and conforming to ANSI/AWWA C151/A21.51, unless otherwise indicated on the construction plans. Ductile iron pipe shall be eighteen (18) foot laying lengths.

(h) Joints

Joining of ductile iron pipe shall be with elastomeric-gasket bell ends or couplings. The joints and rubber gaskets shall be in conformance with ANSI/AWWA C111/A21.11.

(i) Inspection and Testing

City at its discretion may inspect the plant facilities, materials, manufacture and testing of the pipe to be furnished by Contractor. Testing of the pipe to ensure compliance with these Specifications shall be made in accordance with applicable AWWA Standards latest edition. All cost incurred by City for witnessing the manufacture of the pipe and in obtaining test results shall be borne by Contractor furnishing the pipe.

(j) Affidavit of Compliance

City may elect to waive any of the above testing and inspection requirements in which event the Engineer may require the manufacturer to submit affidavits stating that all pipe has been manufactured and tested in accordance with this Specification.

(k) Fittings

All fittings for use with ductile iron pipe shall be ductile iron manufactured in accordance with ANSI/AWWA C110/A21.10 or ANSI/AWWA C153/A21.53. All Mechanical Joint or push-on joint

fittings shall be rated for 350 psi working pressure in sizes 4" through 24". Flange fittings shall be rated for 250 psi working pressure. Flange drilling pattern shall be in accordance with ANSI/AWWA C110/A21.10, or commonly referred to as a 125# drilling pattern.

In accordance with Section 4.3 of ANSI/AWWA C153/A21.53, fittings may be provided with a cement-mortar lining and asphalt coating or fusion bonded epoxy inside and outside. Fusion bonded epoxy shall be in accordance with ANSI/AWWA C116/A21.16 and shall be applied to interior and exterior surfaces.

All tees and crosses shall have all flanged ends with the exception of blowoff, and pumping connections, which shall have flange by Mechanical Joint or push-on joint ends; reducers shall have flange by Mechanical Joint ends; elbows maybe either Mechanical Joint or flanged ends.

(l) Appurtenances

All appurtenances used in conjunction with the ductile iron pipe shall meet the City Standard Specifications.

(m) Lining and Coating

Unless otherwise approved, the internal surface shall be lined with a uniform thickness of cement mortar and then sealed with a thin asphaltic coating in accordance to AWWA C104.

(n) Encasement

The outside surface shall be protected with purple polyethylene encasement furnished and installed in accordance with AWWA C105.

(i) Marking/Identification

Ductile iron pipe shall be identified and marked in accordance to City Standard Drawing RW-1.

33-17.1.1 Confined Easements

All confined easement construction shall be ductile iron.

33-17.2 Polyvinyl Chloride (PVC) Pressure Pipe

Polyvinyl chloride (PVC) pressure pipe shall conform to the applicable sections of the City Standard Specifications.

(h) Fabrication

Polyvinyl chloride pressure pipe shall be purple in color, or be installed in a purple sleeve marked “RECLAIMED WATER –DO NOT DRINK” the entire length of the pipeline, shall conform to AWWA C-900 latest edition for 12" and smaller and AWWA C905 latest edition for 14" and larger, unless otherwise indicated on the construction Plans.

(i) Joints

Joining of PVC pipe shall be with elastomeric-gasket bell ends or couplings. The bell ends shall be an integral thickened bell end (IB) or an integral Sleeve-reinforced bell end. The bell end joints shall have a minimum wall thickness of the bell or Sleeve-reinforced bell equal, at all points, to the DR Requirements for the pipe. The minimum wall thickness in the ring groove and bell-entry sections shall equal or exceed the minimum wall thickness of the pipe barrel.

If bell ends are not part of the pipe, one PVC coupling, manufactured of the same material and by the same manufacturer as the pipe, shall be furnished with each length of pipe together with two (2) rubber rings. The coupling shall be designed to ensure a water-tight joint with the pipe. The coupling body and socket shall have a wall thickness equal to the pipe barrel thickness with which the coupling is to be used.

All rubber rings shall be furnished by the pipe manufacturer. These rubber rings (Elastomeric Gaskets) shall be manufactured to conform with the requirements of ASTM F-477.

(j) Hydrostatic Proof-test

Each length of pipe shall be proof-tested at two (2) times its rated Pressure Class for a minimum dwell of five (5) seconds, in accordance with AWWA C900 and C905.

(k) Inspection and Testing

The City, at its discretion, may inspect the plant facilities, materials, manufacture and testing of the pipe to be furnished by Contractor.

Testing of the pipe to ensure compliance with these Specifications shall be made in accordance with applicable AWWA Standards latest edition. All cost incurred by City for witnessing the manufacture of the pipe and in obtaining test results shall be borne by Contractor furnishing the pipe.

(l) Affidavit of Compliance

City may elect to waive any of the above testing and inspection requirements in which event the Engineer may require the manufacturer to submit affidavits stating that all pipe has been manufactured and tested in accordance with this Specification.

(m) Fittings

All fittings for use with Polyvinyl chloride pipe shall be ductile iron manufactured in accordance with ANSI/AWWA C110/A21.10 or ANSI/AWWA C153/A21.53. All Mechanical Joint or push-on joint fittings shall be rated for 350 psi working pressure in sizes 4" through 24". Flange fittings shall be rated for 250 psi working pressure. Flange drilling pattern shall be in accordance with ANSI/AWWA C110/A21.10, or commonly referred to as a 125# drilling pattern. In accordance with Section 4.3 of ANSI/AWWA C153/A21.53, fittings may be provided with a cement-mortar lining and asphalt coating or fusion bonded epoxy inside and outside. Fusion bonded epoxy shall be in accordance with ANSI/AWWA C116/A21.16 and shall be applied to interior and exterior surfaces.

All tees and crosses shall have all flanged ends with the exception of blow-off, and pumping connections, which shall have flange by Mechanical Joint or push-on joint ends; reducers shall have flange by Mechanical Joint ends; elbows maybe either Mechanical Joint or flanged ends. A/C to C.I.O.D. (PVC adapter rings may not be used).

(n) Appurtenances

All appurtenances used in conjunction with PVC shall meet the City Standard Specifications.

(o) Detachable Ribbon or Tapes

Because PVC is non-conductive and subject to more damage if struck with excavation equipment, an identification marking tape shall be installed in accordance to City Standard Drawing No. RW-1.

33-18 VALVES

33-18.1 Butterfly Valves

(f) General

These Specifications designate the requirements for the manufacture and installation of butterfly valves. The Contractor shall furnish all labor, materials, tools and equipment necessary to install, complete and ready for operation, the valves as shown on the Plans and herein specified.

(g) Materials and Workmanship

Butterfly valves shall be of the rubber-seated tight-closing type. They shall meet or exceed AWWA Standard C504 latest revision. All valves must use full AWWA C504 Class 150B valve shaft diameter, and full Class 150B underground-service-operator torque rating throughout entire travel. All valves shall be NSF approved. Valve body shall be high-strength cast iron ASTM A126 Class B with 18-8 Type 304 stainless steel body seat. Valve vane shall be high-strength cast iron ASTM A48 Class 40, having rubber seat mechanically secured with an integral 18-8 stainless steel clamp ring and 18-8 stainless steel self-locked screws.

Rubber seat shall be full-circle 360 degree seat not penetrated by the valve shaft. Valve shaft shall be one piece, extending full size through the entire valve. Valve shaft shall be 304 stainless steel. Packing shall be O-ring cartridge designed for permanent duty underground. All exposed cap screws and fasteners on the valve body and flanges shall be Ni-Cad steel or approved equal.

(h) Valve Operations

Valve operators shall be of the manual type. The operator shall be totally enclosed, self-locking worm gear or screw type, with adjustable stops to limit disc travel. The number of complete turns of the operator required to rotate this disc 90 degrees shall be approximately the same as an equivalent sized gate valve. All valve operators shall be fully gasketed, weather-proof and factory packed with grease. Operators shall be of the size required for opening and closing the valve against 150 psi water pressure, and shall have a torque rating of not less than shown in AWWA C-504, 1, Class 150-B. Operators for valves located above

ground shall have disc-position indicators and a hand-wheel.

Should the difference between the operating nut and the valve cover exceed 50 inches, an extension mast shall be installed so that the operating nut will not exceed 50 inches from the valve cover or ground surface. Buried operators shall be worm gear or screw type and shall be threaded to accommodate a two inch operating nut, and shall include the operating nut, and a 3/4" hex head plated bolt for operating nut hold-down. All exposed fastenings shall be specifically designed and suitable for permanent buried service. Input shaft and thread for the operating nut shall be at a right angle to the operating shaft. The input shaft shall extend vertically from the side when the valve is in the horizontal position.

Epoxy shall be applied to all surfaces of valve body and vane to an average minimum thickness of 5 mils, conforming to AWWA C 550 Standards. A primer shall be applied before the coating per the epoxy manufacturer's recommendations. The coating shall be applied to the entire valve body and vane before final assembly.

(i) Valve Ends

Valve ends shall be for Flanged Joint pipe and shall conform to ANSI CIII (AWWA A21.11-1972, Class 125) and drilled to ANSI B16.1 for cast iron flanges and flanged fittings, Class 125. Flanges shall be 125# ANSI. The butterfly valves shall be right closing Class 150-B designed for tight shut off with a maximum differential pressure across the disc of 200 psi. Valve shafts shall consist of a one-piece unit extending completely through the valve disc.

(j) Valve Boxes, Nuts and Bolts, Gaskets and Marker Posts shall conform to the provisions specified herein for gate valves.

(k) Marking/Identification

Install an identification tag in accordance to City Standard Drawing RW-18.

33-18.2 Gate Valves

(e) General

These Specifications designate the requirements for the manufacture and installation of gate valves. The Contractor shall furnish all labor, materials, tools and equipment necessary to install, complete and ready for operation, the valves as shown on the Plans and herein specified.

(f) Materials and Workmanship

Gate valves shall be non-rising stem resilient seated type. Valves shall conform to the latest version of AWWA C-509. Valve bodies shall be ductile iron and wedges shall be fully rubber encapsulated.

The stem shall have two O-rings above the collar and one O-ring below the collar. Stem seals must be replaceable with the valve under pressure. The stem material shall be stainless steel [ANSI-420], low zinc bronze or manganese bronze. The waterway shall be full size. No cavities or depressions are permitted in the seat area. Valve body and bonnet shall be electrostatically applied, fusion bonded, epoxy coated both inside and out by the valve manufacturer. The coating shall meet the requirements of AWWA C-550 and NSF 61 approved. All valve body and bonnets bolts and nuts shall be type 304 stainless steel.

All valves must be tested by hydrostatic pressure equal to the requirements in the AWWA C-509 specifications prior to shipment.

Tapping gate valve assemblies shall be used only in conjunction with tapping Sleeves and shall be furnished and installed by the Department of Public Utilities.

Nuts and bolts used for bolting flanged-end gate valves to pipeline flanges above ground, shall be hexagonal head machine bolts and hexagonal nuts conforming to ASTM A307, Grade B. All buried flanged-end gate valves shall be bolted to the pipe line flanges with Ni-Cad nuts and bolts or approved equal.

(g) Gaskets

Gaskets for flanged-end gate valves shall be right face 1/8”.

(h) Valve Ends

Valves may be provided with Mechanical Joint ends, push-on joint ends, flanged ends, Mechanical Joint by flange ends or push-on joint by flange ends.

(i) Marking/Identification

Install an identification tag in accordance to City Standard Drawing RW-18.

33-19 APPURTENANCES

33-19.1 Blow-off Assemblies for Recycled Water Mains

(c) General

Blow-off assemblies shall be furnished and installed by the Contractor at the locations shown on the Plans. The Contractor shall furnish all labor, materials, tools and equipment necessary to furnish and install, complete and ready for operation, the assemblies as shown on the plans and herein specified. See City Standard Drawings RW-7 and RW-8.

(d) Materials, Fabrication and Installation

(1) Materials Shall be ductile iron and sized as designated on the City Standard Drawings. RW-7 and RW-8 or on the Plans.

(2) Valves Gate valves or butterfly valves for blow-off assemblies shall be as specified herein.

(3) Pipes and Fittings Shall be 6 inch or 8 inch ductile iron and shall conform with the standard for ductile iron pipe water main and fittings. Joints on the recycled water main side of the gate valves shall be flanged. Properly restrained MJ fittings are allowed downstream of the gate valve.

(4) Pipe Sleeves and Lids Shall be used per City Standard Drawing RW-2.

(5) Boxes and Lids Shall be per City Standard Drawings RW-7 and RW-8 or Engineer approved equivalent and marked “Recycled Water”. Covers shall be seated flush with the surface of the natural ground or paved surface, such that they may not be damaged by, nor present an obstruction or rough surface to traffic.

33-19.2 Air Release Valve Assemblies

(c) General

Air release valve assemblies shall be furnished and installed by the Contractor at all points where air pockets may form and at the locations shown and/or established in the field by the Engineer. The Contractor shall furnish all labor, materials, tools and equipment necessary to install, complete and ready for operation, the valve assemblies shown on

the plans and herein specified. See City Standard Drawing No. RW-9, RW-10, and RW-11.

(d) Materials, Fabrication and Installation

Materials shall be in accordance with City Standard Drawings. The valve shall be a Vent-o-Mat RBX series, Vent- Tech or approved equal.

33-19.3 Recycled Water Service Assemblies (2 inches and smaller)

(c) General

Recycled water service assemblies shall be furnished and installed by the Contractor at the locations shown on Plans or established in the field by the Developer. The Contractor shall furnish all labor, materials, tools and equipment necessary to install, complete and ready for operation, the assemblies as shown on the Plans and herein specified. The Contractor shall perform the installation of the lot services in accordance with the City Standard Drawing Nos. RW-4 and RW-5. The Developer shall provide the City with a Plan showing the "As Built" location of all services.

(d) Materials, Fabrication and Installation

(1) Materials Shall be those designated on the City Standard Drawings RW-4 and RW-5

Service Size	Corp. Stop	Service Pipe	Angle Meter Stop
1"	1"	1"	1"
1 ½"	1 ½"	1 ½"	
2"	2"	2"	

(2) Pipe and Fittings Service pipe shall be Type K soft copper tubing, or Polyethylene CTS 200 psi SDR-9 PE 3408. Solder fittings shall be soldered with 95% tin / 5% lead or silver solder (pure).

(3) Saddles Service saddles shall be used for all 1", 1-1/2", and 2" taps made on ductile iron and PVC pipe. A circumferential type stainless steel band or bands shaped to fit the actual O.D. of the pipe shall be used. Double strap bands shall provide a minimum bearing width of 1-1/2 inches per band along the axis of the pipe. Single strap bands shall provide a minimum bearing width of 3 inches per band along the axis of the pipe. Saddles shall not have lugs that will cut into the pipe when the saddle is tightened. Saddles are to be Jones, Ford, Mueller or approved equal.

Multiple O.D. range saddles shall not be used.

(4) Service Taps In no case shall a service tap be made in a main closer than 18 inches to a bell coupling joint, or fitting. Service taps shall not be less than two feet apart. Service taps shall be located opposite the service locations so that the service laterals will be perpendicular to the Street centerline. Service tap locations varying more than two feet from the perpendicular must be approved by the Engineer prior to installation. Service taps shall be in accordance with City Standard Drawing Nos. RW-4 and RW-5. Where dissimilar metals are joined, a dielectric connection, approved by the Engineer shall be provided. Hole size drilled in the pipe shall be the same size as the corporation stop. The cutting tool shall be muller cutting type (hole) cutter which will retain the coupon.

Tapping Sleeves and corporation stop valves shall be used for service connections of 2 inches and smaller. For ductile iron recycled water mains, double strap ductile iron service saddles must be used.

(5) Service Boxes

Service casing and covers and meter boxes and covers shall be furnished and installed by the Contractor as shown of City Standard Drawings RW-4 and RW-5. All service casings shall be complete and in place at the time of acceptance of the subdivision. All services shall be marked by an “RW” clearly visible on the curb face. Minimum size 1 ½” X 1 ½ “ maximum 3" X 3".

(6) Curb Stops in Driveway

No services in driveway approaches allowed.

(7) Encasement and Identification

Due to the corrosive nature of soils, a protective polyethylene sleeve shall be installed over the copper service line on all sizes from 1” to 2”. It must be purple in color, to immediately identify it as non-potable service, and shall encase the service line from the corp stop to the angle meter stop in one continuous piece. It shall be attached to both the corp and the angle meter stop by using PVC tape, duct tape, or other suitable adhesive tape.

33-19.4 Valve Service Casing and Lid

Valve Service Casing and Lid Shall conform with City Standard Drawing RW-2. Covers shall be seated flush with the surface of the natural ground or paved surface such that they may not be damaged by, or present an obstruction or rough surface to traffic. Covers shall have a 9 inch wide and 6 inch thick stabilizing concrete ring constructed when the valve is outside the pavement area. Covers must be painted purple by using Pantone 512.

SECTION 34 – RECYCLED WATER FACILITIES

34-1 SCOPE

These City Standard Specifications are intended to describe the execution and workmanship to be used in construction of a recycled water system operated in the City of Fresno. It is presumed that the Developer or his/her engineer has prepared such general and special Specifications as are necessary to define the nature and location of the Work, contractual arrangements, payment for Work, and any other matters concerning the owner or his/her Contractor. All Street work permits shall be obtained and fees shall be paid by the Developer or Contractor.

34-2 GENERAL

34-2.1 Quality Control of Materials

The quality control of materials shall conform to the applicable sections of the City Standard Specifications as published by the City of Fresno.

34-2.2 Quality of Workmanship

All Work will be done by Persons experienced in the specific Work, under competent supervision and in a first class manner to the Engineer's complete satisfaction. Every precaution shall be taken to prevent foreign material from entering the pipe while it is being placed in the trench. If the pipe-laying crew cannot put the pipe into the trench and in place without getting earth into it, the Engineer may require that before lowering the pipe into the trench a heavy tightly woven burlap bag of suitable size shall be placed over each end and left there until the connection is to be made to the adjacent pipe. During laying operations, no debris, tools, clothing or other materials shall be placed in the pipe. After placing a length of pipe in the trench and completing the jointing operation, in a method approved by the pipe manufacturer, the pipe shall be secured in place with approved backfill material placed under it. At times when pipe laying is not in progress, the open ends of the pipe shall be closed by a watertight plug or other means approved by the Engineer. This provision shall apply during any Work stoppage.

34-2.3 Connections to Existing Facilities

Connections shall be performed by Wastewater Division personnel only. One week notice shall be given before any connection is to be made.

34-2.4 Defective Work

Any defective materials or workmanship which becomes evident within one year after the City assumes responsibility for the completed Work shall be

replaced or repaired without cost to the City. Refusal of the Contractor to correct defective Work which is his/her responsibility will be considered just cause for excluding him/her from performing future Work to be connected to the City's system. Such exclusion does not impair the City's right to bring legal action to correct the deficiencies.

34-2.5 Construction Staking and "Record-Drawings"

Construction stakes will be set parallel to the recycled water main alignment at an offset distance and direction agreed upon with the Contractor but in no case shall construction stakes be offset more than 10 feet. Stakes will be set at no greater interval than 100 feet on straight alignments. For horizontally or vertically curved recycled water mains, the stake intervals shall be 25 feet. For all Street recycled water mains, regardless of alignment or slope, the Developer's engineers shall determine "Record-Drawings" elevations at the top of pipe centerline at each change in pipe grade and shall provide a written record of such elevations to the inspector. The Developer's engineer shall also provide "Record-Drawings" of all main line valve locations and all service stop locations.

34-3 POLYVINYL CHLORIDE (PVC) PRESSURE PIPE AND FITTINGS INSTALLATION

34-3.1 Scope of Work

The Contractor performing the Work under this Specification shall furnish all labor tools and equipment, which are necessary to install, complete, and ready for operation, the PVC pressure pipe recycled water mains as herein specified and/or as indicated on the contract drawings.

34-3.2 Installation

Installation shall conform to Chapter 7, Installation, of AWWA Standard C605 and AWWA Manual M23. Bending of PVC pipe barrels to accomplish horizontal or vertical curves is not permitted.

34-3.3 Tracer Wire with Marking Tape

Tracer wire used with PVC **where called for on the Plans** shall be copper wire, Type TW, Size AWG #12 and shall be placed above the PVC recycled water main along with a recycled water marking tape, purple (pantone 512). The marking tape shall be a minimum of six inches wide and a minimum of 12" but no greater than 24" above the pipeline. See City Standard Drawing No.'s RW-1 and RW-24.

34-4 DUCTILE IRON PRESSURE PIPE AND FITTINGS INSTALLATION

34-4.1 Scope of Work

The Contractor performing the Work under this Specification shall furnish all labor tools and equipment, which are necessary to install, complete, and ready for operation, the ductile iron pressure pipe recycled water mains as herein specified and/or as indicated on the contract drawings.

34-4.2 Installation

Installation shall conform to AWWA C-600 and Installation of Ductile Iron Pipe and Fittings in AWWA Manual M41.

34-5 VALVE CASING AND LID INSTALLATION

When recycled water mains are installed, casings and lids in Street areas shall be installed in a lowered position below any sub-grade which may be removed or re-compacted.

When sub-grade is compacted and base material installed and completed, casing and lids shall be completed in accordance with City Standard Drawing Nos. RW-2, “Recycled Water Valve and Valve Box,” and RW-16, “ Recycled Water Irrigation Box Cover Markings”.

Valves located in the sidewalk shall be marked with a 2" X 4" stake so that casings and lids may be brought to finished grade at the time concrete is poured.

Any excavation necessary for valve casing and lid work shall be thoroughly re-compacted to the satisfaction of the Engineer. All casings shall be installed in a vertical position. All valve operating nuts shall be free of any dirt or debris and all valves shall be checked to ensure that they are left in a wide open position.

It shall be the responsibility of the Contractor to do this Work exactly as specified.

34-6 EARTHWORK FOR DUCTILE IRON AND PVC PIPE INSTALLATION

34-6.1 Trench Excavation

The trench shall be constructed per City Standard Specifications, Section 16, City Standard Drawings P-48 and RW-1. Unless shown otherwise on the Plans a minimum cover of 3.5' is required for mains.

34-6.2 Trench Bottom

The trench bottom shall be true and even so that the barrel of the pipe will have soil support for its full length. Earth mounds can be used to support the pipe with the Engineer's approval and under his/her direction.

34-6.3 Bell Holes

Bell holes are required for push-on and mechanical joint pipe. While push-on joints require only a small depression beneath each bell to allow pipe to lay flat on the trench bottom, mechanical joints require additional space for operation of a ratchet wrench.

Minor excavations, which are necessary for removing the sling and for assembling the joints, shall be made in advance of the laying crew and filled after these operations are completed.

34-6.4 Trench Width

The trench must be wide enough to permit proper installation of the pipe with room for assembling joints and tamping backfill around the pipe. The trench must be at least 12 inches wider than the outside diameter of the pipe to allow for proper placement, tamping, and compaction of the initial backfill. Per the City Standard Specifications, Section 16, the width of the trench at the top of the pipe shall not be greater than 16 inches more than the outside diameter of the barrel of the pipe to be laid therein. These requirements may be modified by the Engineer or as shown on the Plans.

34-6.5 Rock or Hardpan Excavation

In rock or hardpan excavations it is necessary that the rock or hardpan be removed so that it will not be closer than 4 inches to the bottom and sides of the pipe for sizes up to 24 inches in diameter. This same practice shall be followed should the trench excavation pass through piles of abandoned masonry, large pieces of concrete or other debris. The pipe shall not be permitted to rest on masonry walls, piers, foundations or other unyielding, subterranean structures which may be encountered in the excavation.

34-6.6 Barricades and Safety

The Contractor shall follow all the requirements in Section 7-10.4 of the City Standard Specifications.

34-6.7 Shoring

In addition to, and consistent with public safety considerations, every precaution for safety must be provided for the workers at the Site. Shoring must comply with Cal-OSHA Standards.

34-7 BACKFILLING AND TAMPING

Backfilling usually follows pipe installation as closely as possible. This protects the pipe from falling materials, eliminates possibility of lifting the pipe due to flooding of open trench, and avoids shifting pipe out of line by cave-ins. The purpose of backfilling is not only to protect the pipe by covering it, but to provide firm, continuous support that will prevent the pipe from settling or resting on the couplings. The essentials of a first class backfilling job shall be as follows:

Provide continuous bedding or support by carefully consolidating approved material under pipe and couplings and between the run of pipe and the trench walls. Provide a cushion on top by hand - placing approved material to at least 12" over the pipe - the balance can then be backfilled by machine.

The first step in providing firm, continuous support for the pipeline is to tamp soil solidly under the pipe and couplings. Tamping can be done with tamping bars to consolidate the backfill material. Hand tamping is best accomplished with damp loamy earth or sand.

The initial backfill material used shall be slightly damp which will pack more solidly under the pipe. This initial backfill is always placed by hand. It shall be shoveled in evenly along both sides of the pipe, making a layer about 4" thick. Then the tamping bar is used to tamp this soil firmly under the pipe. If more than 4" of soil is shoveled in before tamping, the soil can bridge and fail to go under the pipe. Next, another 4" layer is shoveled in and tamped. This is repeated until the pipe is firmly bedded in compact soil up to the top of the pipe. Two 6 inch lifts are then used to achieve a 12 inch cover over the pipe. This completes what is called the “initial” backfill, the thoroughly tamped soil which provides a continuous supporting bed for the pipeline. Where clay soil or unstable soil is encountered, the pipe shall be enveloped in a minimum of four inches of sand - then the backfill completed to at least 12" above the pipe with selected material, then dry sand or other suitable materials shall be laid.

<u>The balance of the backfill</u> which is usually placed by machine, need not be as carefully selected as the initial material. Cleanup shall be in accordance with the City Standard Specifications.

34-8 TESTING AND STERILIZATION

34-8.1 General

The Specifications constituting this section designate the requirements for the procedure, materials, performance, and payment for testing and sterilization of recycled water mains and appurtenances intended for the conveyance of non-potable water under pressure.

Scope of Work The Contractor shall furnish all labor, material, tools, and equipment, including all chemicals, necessary to perform all operations required to complete the testing and sterilization as herein specified.

34-8.2 Field Testing

(e) Hydrostatic Pressure Test Hydrostatic Pressure test. After the pipe and all appurtenances have been laid and the backfill has been placed and compacted, a hydrostatic pressure test shall be conducted. A hydrostatic test shall be conducted on the entire pipeline for a period of 2 hours at a hydrostatic pressure of 200 psi for Class 200 pipe and 150 psi for Class 150 pipe. In locations where there is a combination of Class 200 and Class 150 pipe, the system testing pressure shall be 150 psi. All valves in the pipeline shall be in the open position during system testing.

(f) Preparation The line shall be filled with water at least 24 hours prior to testing. While filling and immediately prior to testing, all air shall be expelled from the pipeline. Where air valves or other suitable outlets are not available for introducing water or releasing air for test purposes, taps and fittings approved by the Engineer shall be installed and later securely plugged.

(g) Procedure The procedure shall follow those specified in the AWWA Standard C-600 Sec. 5.2 for ductile iron and C-605 Sec. 7.3 for PVC pipe. The pressure in the pipeline shall be pumped up to the specified test pressure. When the test pressure has been reached, the pumping shall be discontinued until the pressure in the line has dropped 5 psi, at which time the pressure shall again be pumped up to the specified test pressure. This procedure shall be repeated until the end of the test period. At the end of the test period, the pressure shall be pumped up to the test pressure for the last

time. The total quantity of water pumped to maintain pressure shall be measured and compared to the allowable.

(h) Leakage Shall not exceed the amount calculated, using AWWA Standard C-605 for PVC and C-600 for ductile iron.

34-8.3 Sterilization

Prior to pressure testing and prior to acceptance of Work, the entire pipeline including all valves, fitting, hydrants, service laterals, and other accessories shall be sterilized in accordance with AWWA C-601 latest revision. All mains shall be flushed with potable water after completion of construction and prior to disinfection. The Contractor shall provide a sufficient number of suitable outlets at the end(s) of the line(s) being sterilized in addition to those required by the Plans, to permit the main to be flushed with water at a velocity of at least 5.5 feet per second over its entire length. The outlets provided shall meet the requirements for fittings as specified for the type of main constructed. Temporary blow-offs may be installed during the sterilization and flushing to satisfy these requirements. Drainage facilities shall be constructed such that the water lines cannot be contaminated through the flushing outlet. After flushing, chlorine compound solution made with liquid chlorine, calcium hypochlorite in solution or sodium hypochlorite solution shall be water mixed and introduced into the mains to form a chlorine concentration of approximately 100 ppm or that which will provide a minimum residual of 50 ppm in all parts of the line after 24 hours have elapsed.

During the sterilization process all valves, hydrants and other accessories shall be operated. After chlorination, the water shall be flushed from the line at its extremities until the replacement water tests are equal chemically and bacteriologically to those of the permanent source of supply. The placing of chlorine capsules or tablets in pipe sections during the laying process will be considered as an acceptable method of sterilization. The chlorine water solutions shall be diluted to a chlorine concentration of not more than 100 ppm and not less than 50 ppm measured in the water lines. The Contractor shall keep adequate chlorine residual testing and indicating apparatus available on the site during the entire sterilization period.

After final flushing, the flushing fitting shall be plugged with devices intended for this purpose at the pressure class of the pipe. Where water main is coated, plugs and outlets shall be similarly coated. Bacteriologic samples of water for the specified bacteriologic test shall be taken from each end of the sterilized main (located downstream of the point of introduction of chlorine disinfectant and at other locations as determined necessary by the Engineer.) Additional samples shall be taken at intermediate points in such a manner that at least one sample is taken for each 700 feet of main. Bacterial samples will be taken a minimum of 48 hours after the mains have been flushed of all chorine.

The Contractor shall dechlorinate disinfecting water and flushing water if required by the Plans

34-9 SIGNAGE

A sign reading “Recycled Water-Do Not Drink” in English and Spanish, shall be posted at all points where consumption of the water may be attractive to the public, in areas of public use that receive reclaimed water and at all valves, control boxes, and similar features in accordance with City Standard Drawing No RW-13 . This requirement may also apply to sprinkler heads when after-market clip-on purple rings are readily available in accordance with City Standard Drawing No RW-19.

34-10 ABANDONMENT

34-10.1 General

All existing non-potable waterlines or structures that are to be abandoned must be identified in the drawing. In general, abandoned lines that are in service will be replaced with a parallel line of equal or larger size, and the Engineer shall demonstrate in any case that the abandonment does not adversely affect the water system.

34-10.2 Recycled Water Lines

All non-potable water lines to be abandoned shall be entirely filled by pumping concrete into them. The pump mix shall be a mixture sufficiently workable for the purposes intended.

SECTION 35 – NON-CITY OF FRESNO PUBLIC RIGHT OF WAY

35-1 General

A. This Section 33 of the City Standard Specifications is to provide standard requirements for the installation of public right of way projects which are not owned by the City of Fresno (i.e. Freeways, Railways, Irrigation canals). The purpose of this section is to ensure the ability of the City to provide uninterrupted utility services to all customers and also retain the ability to maintain it’s infrastructure without major disruption to the public.

35-2 Sewer Crossings

A. There shall be no City owned access structures located in a non City owned right of way unless the length of sewer in said ROW is in excess of 700 feet. All sewers existing or new which cross the ROW must be protected with a steel casing per City Standard Drawing S-7. The casing must extend 10 feet beyond the entire length of the ROW. For each sewer casing installed an additional redundant parallel casing

must be installed with identical slope and elevation and must be located no more than 5 feet (facing edge to facing edge) from the original casing. However the casings must be separated by enough distance to allow adequate compaction around the casings. There must be a 12" concrete plug installed in each end of the redundant casing.

B. If any Sewer pipes are to be abandoned or rerouted during the installation of the project, the sewer must be CCTV inspected prior to commencement of the work. All laterals must be investigated and if active shall be rerouted to an active sewer. If the project includes the rerouting of any sewer or installation of new sewers access structures must be installed at each change indirection and at a minimum spacing of every 600 feet.

35-3 Recycled Water Crossings

A. All recycled water pipes existing or new which cross the ROW must be protected with a steel casing per City Standard Drawing W-24. The casing must extend 10 feet beyond the entire length of the ROW. For each casing installed an additional redundant parallel casing must be installed with identical slope and elevation and must be located no more than 5 feet from the original casing.